Appendix H
Conceptual Water Quality Management Plan

CONCEPTUAL WATER QUALITY MANAGEMENT PLAN

"SunPointe"
Vesting Tentative Tract Map No. 17433

Project Address:
South of Avenida Del Caballo and Charreadas
City of Laguna Niguel, CA

Prepared For:
Euland Capital Enterprises
59 Honeyflower
Irvine, CA 92620
(949) 293-2246

Prepared By:
Hunsaker & Associates Irvine, Inc.
3 Hughes
Irvine, CA 92618
(949) 583-1010
ATTN: Tommy Hsu

WQMP Preparation/Revision Date:
April 17, 2015

W.O #. 2950-5

CONCEPTUAL WATER QUALITY MANAGEMENT PLAN

"SunPointe" – Vesting Tentative Tract Map No. 17433

Project Address: South of Avenida Del Caballo and Charreadas

City of Laguna Niguel, California

Conceptual Water Quality Management Plan

(WQMP)

Project Name:

"SunPointe"
Vesting Tentative Tract Map No. 17433
APN No. 637-071-001 to 637-071-036

Located South of Avenida Del Caballos and Charreadas

City of Laguna Niguel, California

Prepared for:

Euland Capital Enterprises, LLC
59 Honeyflower
Irvine, CA 92620
(949) 293-2246

Prepared by:

Hunsaker and Associates Irvine, Inc.
Engineer: Doug Staley Registration No.: 38796
Three Hughes
Irvine, CA 92618
(949) 583-1010

Prepared: August 27, 2014
Revised: January 19, 2015
Revised: April 17, 2015

Project Owner's Certification			
Permit/Planning Application No.	Site Development Permit SP 12-07P	Grading Permit No.	N/A
Tract/Parcel Map No.	VTTM No. 17433	Building Permit No.	N/A
CUP, SUP and/or APN (Specify Lot Numbers if Portions of Tract)		1 – 4, 6 Mar Bizcocho Road; 1 – 6, 8 Hombre De Guerra Road; 1 – 8, 10 Calle Cambio; 1 – 9 Avenue Del Caballo; 1 – 4, 6 Remolino Lejos Road APN No. 637-071-001 to 637-071-036 Vesting Tentative Tract Map No. 17433	

This Water Quality Management Plan (WQMP) has been prepared for Euland Capital Enterprises, LLC, a California Limited Liability Company, by Hunsaker and Associates Irvine, Inc. The WQMP is intended to comply with the requirements of the local NPDES Stormwater Program requiring the preparation of the plan.

The undersigned, while it owns the subject property, is responsible for the implementation of the provisions of this plan and will ensure that this plan is amended as appropriate to reflect up-to-date conditions on the site consistent with the current Orange County Drainage Area Management Plan (DAMP) and the intent of the non-point source NPDES Permit for Waste Discharge Requirements for the County of Orange, Orange County Flood Control District and the incorporated Cities of Orange County within the San Diego Region (South Orange County). Once the undersigned transfers its interest in the property, its successors-in-interest shall bear the aforementioned responsibility to implement and amend the WQMP. An appropriate number of approved and signed copies of this document shall be available on the subject site in perpetuity.

Owner:			
Title	David Shieh, President		
Company	Euland Capital Enterprises, LLC		
Address	59 Honeyflower, Irvine, CA 92620		
Email	eulandcapital@yahoo.com		
Telephone #	(949) 293-2246		
I understand my responsibility to implement the provisions of this WQMP including the ongoing operation and maintenance of the best management practices (BMPs) described herein.			
Owner Signature		Date	

Contents

Section I Permit(s) and Water Quality Conditions of Approval or Issuance 1
Section II Project Description 2
II.1 PROJECT DESCRIPTION 2
II.2 POTENTIAL STORMWATER POLLUTANTS 4
II.3 HYDROLOGIC CONDITIONS OF CONCERN 5
II.4 POST DEVELOPMENT DRAINAGE CHARACTERISTICS 6
II.5 PROPERTY OWNERSHIP/MANAGEMENT 6
Section III Site Description 7
III.1 PHYSICAL SETTING 7
III.2 SITE CHARACTERISTICS 8
III.3 WATERSHED DESCRIPTION 10
Section IV Best Management Practices (BMPs) 11
IV. 1 PROJECT PERFORMANCE CRITERIA 11
IV.2 SITE DESIGN AND DRAINAGE PLAN 12
IV.3 LID BMP SELECTION AND PROJECT CONFORMANCE ANALYSIS 13
IV.4 ALTERNATIVE COMPLIANCE PLAN (IF APPLICABLE) 21
Section V Inspection/Maintenance Responsibility for BMPs 23
Section VI Site Plan and Drainage Plan 28
Section VII Educational Materials Included 29

Attachments

Attachment A ..... Educational Materials
Attachment B ..... BMP Worksheets/Calculations & BMP Details
Attachment C ..... Hydromodification Analysis
Attachment D ..... Conditions of Approval

Section I Permit(s) and Water Quality Conditions of Approval or Issuance

PROJECT INFOMATION			
Permit/Application No.	TBD	Tract/Parcel Map No.	VTTM 17433
Additional Information/ Comments:	The project was previously approved under Tract Map No. 5241, with this conceptual WQMP receiving initially approved by the City on September 14, 2014. This WQMP has been revised to reflect changes to the site's proposed layout.		
WATER QUALITY CONDITIONS			
Water Quality Conditions (list verbatim.)	This WQMP has been prepared pursuant to the requirements of the County of Orange MS4 Permit (Order No. R9-2009-0002/NPDES No. CAS0108740, of the San Diego Regional Water Quality Control Board) and the City of Laguna Niguel Municipal Code (Title 6, Division 3, Article 5, Section 6-3-400—through 6-3-599) and the Local Implementation Plan (LIP) for Jurisdictional Runoff Management Program. Site specific conditions of approval will be provided (Attachment D) once available from the City of Laguna Niguel.		
WATERSHED-BASED PLAN CONDITIONS			
Provide applicable conditions from watershed-based plans including TMDLs	The project is located within the San Juan Creek Watershed Work Plan. Current conditions to meet the receiving water's water quality objectives include requirements for the preparation of a WQMP and BMPs to address potential storm water pollutants present in runoff. San Juan Creek currently has an established TMDL for pathogens.		

Section II Project Description

II.1 PROJECT DESCRIPTION

<table>
<tr><th colspan="3">DESCRIPTION OF PROPOSED PROJECT</th></tr>
<tr><td>Development Category (Verbatim from WQMP):</td><td colspan="2">This project is considered a priority project under the following categories:

Category 1 – New development projects that create or add 10,000 square feet or more of impervious surface. This category includes commercial, industrial, residential housing subdivisions, mixed-use and public projects on private or public property that falls under the planning and building authority of the Permittees.

Category 4 – Hillside development greater than 5,000 square feet. Hillside development is defined as any development which is located in an area with known erosive soil conditions or where the natural slope is twenty-five percent or greater.</td></tr>
<tr><td>Project Area (ft^2):
850,291 ft^2 (19.52 Ac.)</td><td>Number of Dwelling Units: 71 Single Family Residential Units</td><td>SIC Code: N/A for residential.</td></tr>
<tr><td>Narrative Project Description:</td><td colspan="2">The proposed Project, "SunPointe", consists of proposed Vesting Tentative Tract Map No. 17433 in the City of Laguna Niguel, California. The project consists of the development of approximately 19.52 acres to accommodate 71 detached single-family residential units and related improvements, including project streets, storm drain system, curbs, sidewalks, gutters, landscaping areas, a park, parking areas, utilities and related improvements.

A summary of the project site and uses is as follows:
<table>
<tr><th>Lot</th><th>Acreage</th><th>Land Use</th></tr>
<tr><td>1-71</td><td>5.25</td><td>Single Family Residential</td></tr>
<tr><td>72</td><td>0.47</td><td>Entry Gate House/MNWD Pump Station</td></tr>
<tr><td>73</td><td>0.39</td><td>Park</td></tr>
<tr><td>74</td><td>0.12</td><td>Park</td></tr>
<tr><td>A</td><td>2.14</td><td>Manufactured Slope/Open Area/Regional Trail/Access Road</td></tr>
<tr><td>B</td><td>1.28</td><td>Manufactures Slope/Open Area</td></tr>
<tr><td>C</td><td>1.94</td><td>Manufactures Slope/Open Area</td></tr>
<tr><td>D</td><td>2.01</td><td>Manufactured Slope/Open Area/MNWD Easement</td></tr>
<tr><td>E</td><td>0.65</td><td>Open Space/Regional Trail</td></tr>
<tr><td>F</td><td>0.48</td><td>Manufactured Slope/Open Area</td></tr>
<tr><td>G</td><td>1.37</td><td>Manufactured Slope/Open Area</td></tr>
</table></td></tr>
</table>

DESCRIPTION OF PROPOSED PROJECT

Streets	3.42	Street/ROW/Courtyards/Parking
Total	**19.52**	--

The proposed residential lots will range from 2,421 ft^2 to 5,189 ft^2, with an average lot size of 3,220 ft^2, with multi-story units ranging from 2,032 ft^2 to 2,512 ft^2 of living area.

Unit plan summary for the proposed units is as follows:

Plan Type	Living Area (sf.)	Units
Plan 1	2,032	22
Plan 2	2,253	21
Plan 3	2,326	15
Plan 4	2,512	13
Total	--	71

Parking will be provided via covered garage parking (2 per unit) and 119 designated uncovered parking spaces located along the project's streets and within courtyards. Total parking provided is 261 spaces. The project parking shall be consistent with the City of Laguna Niguel parking requirements.

Proposed common area landscaping will consist of open space lots, two parks, landscaped slopes and parkway landscaping located in designated areas throughout the site. These common areas shall be considered private, to be maintained by the Homeowners' Association (HOA). Total common landscaping area is approximately 10.48 acres, or 54% of the project site.

Other landscaping areas anticipated for the project include those located within each individual lot, which is anticipated to consist of approximately 35% of each residential lot (1.84 acres total).

Paved areas and other impervious portions of the project site include the project's streets, courtyards, curb, sidewalk and gutter improvements and the residential building footprint of each residential lot.

With the exception of the proposed parks in Lots 73 and 74, no other community facilities, such as designated trash enclosures, car wash areas, community center or other similar facilities are proposed for the project.

No delivery or storage areas are proposed for the project.

Activities similar to those of residential developments can be anticipated for the project. These are anticipated to include day to day activities such as recreation, walking, commuting and other activities typical of residential developments.

DESCRIPTION OF PROPOSED PROJECT				
	Typical residential related trash is anticipated to be produced daily from each of the residential units. All trash will be stored within the private areas of each residence and be picked up for disposal on a weekly basis by the contracting waste hauler. All improvements are shown in the WQMP Site Plan in Section VI.			
Project Area	Pervious Surface		Impervious Surface	
	Area (acres or sq ft)	Percentage	Area (acres or sq ft)	Percentage
Pre-Project Conditions	17.57 Ac.	90%	1.95	10%
Post-Project Conditions	12.3 Ac.	63%	7.22 Ac.	37%
Drainage Patterns/Connections	In general, the northern portion of the site and the graded lots and streets located south of Avenida Del Caballo drain southerly and northerly, respectively, to Avenida Del Caballo, and is conveyed northeasterly as gutter flow prior to discharging to an existing catch basin downstream. Runoff is then conveyed northeasterly in an existing 36" storm drain prior to discharging to the Oso Creek Channel (L03). Runoff from the southern slopes is conveyed as sheet flow and concentrated flow downstream (southerly/southeasterly) to an existing concrete channel prior to discharging to the Oso Creek Channel (L03). Runoff is then conveyed southerly to Trabuco Creek (L02) prior to discharging to San Juan Creek (L01).			

II.2 POTENTIAL STORMWATER POLLUTANTS

Table 2.1, Anticipated and Potential Pollutants Generated by Land Use Type, from the Technical Guidance Document (December 2013) lists the following Pollutants of Concern (POC's) associated with the proposed development:

POLLUTANTS OF CONCERN			
Pollutant	Check One: E=Expected to be of concern N=Not Expected to be of concern		Additional Information and Comments
Suspended Solids/Sediment	E ☒	N ☐	Potential sources of sediment include landscaping areas and disturbed earth surfaces.
Nutrients	E ☒	N ☐	Pollutant is a Primary POC. Potential sources onsite include fertilizers, sediment and trash/debris.

POLLUTANTS OF CONCERN			
Pollutant	Check One: E=Expected to be of concern N=Not Expected to be of concern		Additional Information and Comments
Metals	E ☒	N ☐	Pollutant is a Primary POC. Potential sources of metals include vehicles in the parking spaces, courtyards and project streets.
Pathogens (Bacteria/Virus)	E ☒	N ☐	Pollutant is a Primary POC. Potential sources for the project include food wastes, sediment and landscaping areas.
Pesticides	E ☒	N ☐	Pollutant is considered a Primary POC. Potential sources include landscaping areas onsite.
Oil and Grease	E ☒	N ☐	Potential sources include automobiles in parking areas and from project streets and courtyards.
Toxic Organic Compounds	E ☒	N ☐	Pollutant is considered a Primary POC. Potential sources include automobiles and other motor vehicles, parking areas, streets and courtyards.
Trash and Debris	E ☒	N ☐	Potential sources of trash and debris include landscaping activities, food wrappers and food wastes.

II.3 HYDROLOGIC CONDITIONS OF CONCERN

The purpose of this section is to identify any hydrologic conditions of concern (HCOC) with respect to downstream flooding, erosion potential of natural channels downstream, impacts of increased flows on natural habitat, etc. that may occur as the result of project implementation. As specified in Section 2.3.3 of the 2011 Model WQMP, projects must identify and mitigate any HCOCs. A HCOC is a combination of upland hydrologic conditions and stream biological and physical conditions that presents a condition of concern for physical and/or biological degradation of streams.

Is the proposed project potentially susceptible to hydromodification impacts?

☐ No – Show map and/or describe and reference supporting documentation in the space below

☒ Yes – Describe applicable hydrologic conditions of concern in the space below.

Based on the current County of Orange HCOC Susceptibility data, the project has the potential for downstream impacts (HCOC), as downstream reaches of Oso Creek just prior to confluence with Trabuco Creek is unlined.

To address the project's HCOC, subsurface storm water detention vaults will be employed onsite to capture and retain the difference in runoff flow rates between the site's native and proposed conditions.

Based on the project's Hydromodification Analysis from the South Orange County Hydrology Model, provided in Attachment C of this report, with implementation of the project's BMPs, post-development runoff flow rates and durations will not exceed the site's natural conditions (pre-

development) by more than 10% of the time, from 10% of the 2-year runoff event up to the 10-year runoff event.

Summary of the report is provided in Section IV.3.5 of this WQMP.

II.4 POST DEVELOPMENT DRAINAGE CHARACTERISTICS

Describe post development drainage characteristics

In the post-development condition, runoff from residential units will be conveyed as sheet flow, gutter flow and area drain flow to the project's proposed main storm drain line. Runoff is then conveyed along Avenida Del Caballo downstream and discharged as in pre-project conditions (to 36" storm drain line and Oso Creek).

Runoff from the project streets and parking areas will be conveyed as gutter flow to project catch basins prior to discharging to the project's main storm drain system.

To satisfy the project's requirement for Low Impact Development (LID) BMPs, hydromodification impacts and to address the project's storm water pollutants of concern, the project proposes the use of bioretention (biofiltration) facilities where feasible, at the upstream portions of the project site (nearest to the source), and subsurface storm water detention vaults with proprietary biofiltration for the remaining portions of the site. Runoff from the project's main storm drain line will be conveyed to the proposed vaults for detention prior to discharging offsite.

II.5 PROPERTY OWNERSHIP/MANAGEMENT

The property owner and developer, Euland Capital Enterprises, LLC, shall assume all BMP maintenance and inspection responsibilities until ownership and responsibilities for the project site and related BMPs have been transferred to the HOA. Thereafter, the HOA shall be the mechanism responsible for ensuring long-term funding, inspection and maintenance for all onsite BMPs, as prescribed in this WQMP.

Section III Site Description

III.1 PHYSICAL SETTING

General descriptions of the project area are provided below:

PHYSICAL SETTING	
Planning Area/ Community Name	Site does not reside within a Specific Plan planning area. Proposed Community Name: "SunPointe"
Location/Address	1 – 4, 6 Mar Bizcocho Road; 1 – 6, 8 Hombre De Guerra Road; 1 – 8, 10 Calle Cambio; 1 – 9 Avenue Del Caballo; 1 – 4, 6 Remolino Lejos Road; City of Laguna Niguel, CA
Project Area Description	The site is located consists of 35 rough graded single-family lots with paved streets and existing utilities constructed as part of Tract 5251. The site is located west/southwest of the intersection of Avenida Del Caballo and Charreadas. Specifically, the site is bound to the north by Mira Vista and existing residential; to the east by existing residential/automotive dealership; to the south by automotive dealership; and to the west by vacant land and residential homes beyond.
Land Use	Existing: Single-Family Residential (Vacant) Proposed: Single-Family Residential
Zoning	Existing: RS-3 (Single-Family Residential – District 3) Proposed: RP – Planned Residential Development
Acreage	19.52 Ac.
Predominant Soil Type	Hydrologic Soil Type D

III.2 SITE CHARACTERISTICS

The following table summarizes general characteristics of the project site:

SITE CHARACTERISTICS	
Precipitation Zone	0.85 in.
Topography	The site is located within the low-lying foothills along the eastern side of the San Joaquin Hills in Laguna Niguel, California. The site is situated on an east-facing hillside with moderate relief. Surface elevations onsite range from approximately 250 feet to 455 feet above mean sea level. The site is bounded on the south by a slope descending to Rancho Capistrano; on the north by an existing residential development, through which access to the site is provided by existing street improvements for Avenida del Caballo; on the west by a natural slope which ascends at an approximate slope ratio of 2.2:1 (horizontal:vertical) to the prominent, generally north-south trending ridgeline near the boundary of the adjacent Tract 10726; and on the east by the Mercedes Benz of Laguna Niguel facility. Site terrain is generally steep, with onsite paved roads ranging from 1% up to 15% at the site's entrance. In general, the rough graded pads slope at approximately 1% towards the project's paved streets. Graded slopes located upstream of the site to the west average a gradient of approximately 45%, while the site's downstream slope to the south/southeast average approximately 30% gradient.
Drainage Patterns/Connections	In general, the northern portion of the site and the graded lots and streets located south of Avenida Del Caballo drain southerly and northerly, respectively, to Avenida Del Caballo, and is conveyed northeasterly as gutter flow prior to discharging to an existing catch basin downstream. Runoff is then conveyed northeasterly in an existing 36" storm drain prior to discharging to the Oso Creek Channel (L03). Runoff from the southern slopes is conveyed as sheet flow and concentrated flow downstream (southerly/southeasterly) to an existing concrete channel prior to discharging to the Oso Creek Channel (L03). Runoff is then conveyed southerly to Trabuco Creek (L02) prior to discharging to San Juan Creek (L01).

SITE CHARACTERISTICS	
Soil Type, Geology, and Infiltration Properties	The project site is located in the eastern foothills of the San Joaquin Hills, one of a number of generally northwest-trending mountain ranges that comprise the Peninsular Range Geomorphic Province of Southern California. A sequence of Tertiary-age sedimentary rocks underlies this area of Orange County and includes, among other units, the Capistrano Formation. Sediments of the Capistrano Formation were deposited in a submarine basin, which was subsequently faulted and downwarped during Miocene-Pliocene time into a north-trending structural trough known as the Capistrano Embayment. Broad, gently folding, north-south faulting, and regional uplift in the last 4 million years have exposed these bedrock units at the surface, where subsequently they have been locally modified by landslides and capped by Quaternary surficial units, including alluvium, colluvium, slope wash, terrace deposits, and man-made fill. Based on the County of Orange Technical Guidance Document for Preparation of WQMPs and NRCS Web Soil Survey, onsite soils consist primarily of Alo Clay, which is classified as a Hydrologic Soil Group "D" soil. The expansion potential of clays is high, with low infiltration potential.
Hydrogeologic (Groundwater) Conditions	Routine dewatering activities are currently performed on a regular basis to maintain slope stability onsite.
Geotechnical Conditions (relevant to infiltration)	Due to the site's location (hillside), soil type and the need to perform routine dewatering operations to maintain slope stability, infiltration BMPs are not proposed for the project.
Off-Site Drainage	The site receives run-on from existing slopes in the west/northwest. In the developed condition, run-on from these areas will be conveyed through the site.
Utility and Infrastructure Information	Existing utilities within project limits include backbone utilities previously constructed as part of Tract 5251 development. These improvements will be removed to accommodate the proposed site plan for VTTM 17433.

III.3 WATERSHED DESCRIPTION

The following table provides descriptions of the project's receiving waters.

WATERSHED DESCRIPTION	
Receiving Waters	Oso Creek (Lower), Trabuco Creek, San Juan Creek, Pacific Ocean
303(d) Listed Impairments	Oso Creek (Lower) – Metals (Selenium), Toxicity Trabuco Creek – Pesticides (Diazinon), Nutrients (Phosphorus, Total N), Toxicity San Juan Creek – Pathogens, Pesticides (DDE), Nutrients (Phosphorus, Total N), Metals (Selenium), Toxicity San Juan Creek Mouth - Pathogens Pacific Ocean Shoreline at San Juan Creek - Pathogens
Applicable TMDLs	San Juan Creek – Indicator Bacteria
Pollutants of Concern for the Project	Primary Pollutants of Concern – Nutrients, Pathogens, Pesticides, Metals, Toxicity and
Environmentally Sensitive and Special Biological Significant Areas	The project site does not contain any environmentally sensitive areas (ESAs), as defined in the Basin Plan and the County of Orange Drainage Area Management Plan (DAMP). Although the site does not discharge directly to areas defined as ESAs or Areas of Special Biological Significance (ASBS), the site is tributary to impaired water bodies, which are designated as ESAs under DAMP guidelines.

Section IV Best Management Practices (BMPs)

IV. 1 PROJECT PERFORMANCE CRITERIA

The project's performance criteria for HCOCs and LID BMPs are provided in the following table:

PROJECT PERFORMANCE CRITERIA	
If HCOC exists, list applicable hydromodification control performance criteria (Model WQMP Appendix C)	All Priority Development Projects (PDP) must use continuous simulation to ensure that post-project runoff flow rates and durations for the PDP shall not exceed pre-development, naturally occurring, runoff flow rates and durations by more than 10% of the time, from 10% of the 2-year runoff event up to the 10-year runoff event.
List applicable LID performance criteria (Per Section 7.II-2.4.3 of SOC MWQMP)	• LID BMPs must be designed to retain, on-site, (infiltrate, harvest and use, or evapotranspire) storm water runoff up to 80 percent average annual capture efficiency. • LID BMPs must be designed to: - Retain, onsite, (infiltrate, harvest and use, or evapotranspire) stormwater runoff as feasible up to the Design Capture Volume, and - Recover (i.e., draw down) the storage volume as soon as possible after a storm event, and if necessary - Biotreat, on-site, additional runoff, as feasible, up to 80 percent average annual capture efficiency (cumulative, retention plus biotreatment), and, if necessary - Fulfill alternative compliance obligations for runoff volume not retained or biotreated up to 80 percent average annual capture efficiency using treatment controls or other alternative approaches as described in Section 7.II-3 of the SOC MWQMP.
Calculate LID DCV for Project	DCV = C x D x A x 43560 sf/ac x 1 ft/12 in Where: DCV = design storm capture volume, cu-ft = 25,778 cu-ft* C = runoff coefficient = (0.75 x imp + 0.15) = 0.428 Imp = impervious fraction of drainage area (0 to 1) = 0.37 D = storm depth (inches) = 0.85 A = tributary area (acres) = 19.52

*See Section IV.2.2 for DCV based on DMAs.

IV.2 SITE DESIGN AND DRAINAGE PLAN

The primary goal of site design principles and techniques is to reduce land development impacts on water quality and downstream hydrologic conditions. Benefits of site design include reductions in the size of downstream BMPs, conveyance systems, pollutant loading and hydromodification impacts.

IV.2.1 Site Design BMPs

The following section describes the site design BMPs that have been incorporated into this project.

Minimize Impervious Area

The project will increase impervious surfaces as compared to pre-project conditions. However, development of the site will include open space areas, common landscaping areas and private landscaping located within each homeowner lot to minimize the amount of impervious area.

Maximize Natural Infiltration Capacity

Due to the presence of clay-rich soils (Hydrologic Soil Group D) and slope stability concerns, infiltration is not recommended onsite.

Preserve Existing Drainage Patterns and Time of Concentration

In the proposed condition, runoff from the site will be conveyed similar to pre-project conditions, with hydromodification controls employed to retain the site's pre-development runoff flow rates and volumes.

Disconnect Impervious Areas

Landscaping will be provided adjacent to sidewalks and open space/landscape lots and within private residential lot areas to break up the project's impervious areas.

Protect Existing Vegetation and Sensitive Areas, and Revegetate Disturbed Areas

Some existing vegetation in within the project's southern slopes will be retained. Areas to be disturbed by construction will be paved or landscaped with native and/or drought tolerant plant species with a deep root system.

Revegetate Disturbed Areas and Xeriscape Landscaping

Native and/or tolerant landscaping will be incorporated into site design, consistent with City guidelines, in proposed landscaping areas.

IV.2.2 Drainage Management Areas (DMAs)

Per the TGD, the project site has been divided into Drainage Management Areas (DMAs) to be utilized for defining drainage areas tributary to the project's BMPs. DMA limits have been delineated based on the tributary drainage area for each BMP.

The design capture volume (DCV) utilizing the "Simple Method" described in TGD Section III.1.1 is provided below. Locations of DMAs and associated LID BMPs are provided on the exhibits in Section VI. Additional calculations and TGD Worksheets are provided in Appendix B of this WQMP.

DMA	Area (Ac.)	% Imp.	C-value	Design Storm Depth (in.)	Simple Method DCV (ft^3)
1	0.017	41	0.4575	0.85	24
2	0.035	77	0.7275	0.85	79
3	0.019	74	0.705	0.85	41
4	0.014	50	0.525	0.85	23
5	0.034	41	0.4575	0.85	48
6	0.037	60	0.6	0.85	69
7	17.0	63	0.6225	0.85	32,652

IV.3 LID BMP SELECTION AND PROJECT CONFORMANCE ANALYSIS

Per the South County Model WQMP, Low Impact Development (LID) BMPs must be incorporated into design features and source controls to reduce project related storm water pollutants. The incorporation of LID BMPs into project design requires evaluation of LID measures in the following treatment hierarchy: infiltration, evapotranspiration, harvest/reuse and biotreatment.

IV.3.1 Hydrologic Source Controls (HSC)

Hydrologic source controls (HSCs) can be considered to be an integration of site design practices and LID BMPs. The goal of HSCs is to reduce runoff volume for a given drainage area without reducing the site's true impervious area.

Name	Included?
Localized on-lot infiltration	☐
Impervious area dispersion (e.g. roof top disconnection)	☐
Street trees (canopy interception)	☒
Residential rain barrels (not actively managed)	☐
Green roofs/Brown roofs	☐
Blue roofs	☐
Impervious area reduction (e.g. permeable pavers, site design)	☐

Trees will be planted at the project's parkways, open space and park areas to provide canopy interception of rain, thereby reducing the site's runoff during rain event.

IV.3.2 Infiltration BMPs

Infiltration BMPs are LID BMPs that capture, store and infiltrate storm water runoff. These BMPs are engineered to store a specified volume of water and have no design surface discharge (underdrain or outlet structure) until this volume is exceeded. Examples of infiltration BMPs include infiltration trenches, bioretention without underdrains, drywells, permeable pavement, and underground infiltration galleries.

Name	Included?
Bioretention without underdrains	☐
Rain gardens	☐
Porous landscaping	☐
Infiltration planters	☐
Retention swales	☐
Infiltration trenches	☐
Infiltration basins	☐
Drywells	☐
Subsurface infiltration galleries	☐
French drains	☐
Permeable asphalt	☐
Permeable concrete	☐
Permeable concrete pavers	☐
Other:	☐

Due to the presence of unfavorable soil type onsite (HSG Type D), the site's location and the existing groundwater onsite, infiltration BMPs have not been selected for this project.

IV.3.3 Evapotranspiration, Rainwater Harvesting BMPs

Name	Included?
EVAPOTRANSPIRATION	
All HSCs; *See Section IV.3.1*	☐
Surface-based infiltration BMPs	☐
Biotreatment BMPs	☐
HARVEST & REUSE/ RAINWATER HARVESTING	
Above-ground cisterns and basins	☐
Underground detention	☐

Name	Included?
Other:	☐

Evapotranspiration

Evapotranspiration BMPs are a class of retention BMPs that discharges stored volume predominately to ET, through some infiltration may occur. ET includes both evaporation and transpiration, and ET BMPs may incorporate one or more of these processes. BMPs must be designed to achieve the maximum feasible ET, where required to demonstrate that the maximum amount of water has been retained on-site. Since ET is not the sole process in these BMPs, specific design and sizing criteria have not been developed for ET-based BMPs.

Biofiltration BMPs are proposed to treat runoff from various portions of the project site. These BMPs utilize some evapotranspiration as a physical process for runoff volume reduction. Since this volume is minimal, evapotranspiration of runoff has not been accounted for in the sizing calculations. The selected Biofiltration BMPs are described further in Section IV.3.4.

Harvest and Reuse

Harvest and Reuse (aka. Rainwater Harvesting) BMPs are LID BMPs that capture and store storm water runoff for later use. These BMPs are engineered to store a specified volume of water and have no design surface discharge until this volume is exceeded. Harvest and use BMPs include both above-ground and below-ground cisterns. Examples of uses for harvested water include irrigation, toilet and urinal flushing, vehicle washing, evaporative cooling, industrial processes and other non-potable uses.

The project does not propose the use of harvesting BMPs, as sources of reclaimed water are available for irrigation of the project's opens space areas. Based on Section X.2.8 of the TGD, if sufficient reclaimed water supply is available to meet the project's demand for use, then the project proponent is allowed to consider harvest and use to be infeasible. Biotreatment BMPs will be employed to address low flow (irrigation and other non-storm water runoff) and storm water runoff from project areas. Additionally, due to the type of project, there is insufficient demand for the use of harvested water source.

IV.3.4 Biofiltration BMPs

Biofiltration BMPs are a class of structural LID BMPs that treat suspended solids and dissolved pollutants in storm water using mechanisms characteristic of biologically active systems. These BMPs are considered treat and release facilities and include treatment mechanisms that employ soil microbes and plants. Additional benefits of these BMPs may include aesthetic enjoyment, recreational use, wildlife habitat and reduction in storm water volume.

BIOFILTRATION	
Name	Included?
Bioretention with underdrains	☒
Stormwater Planter boxes with underdrains	☐
Proprietary vegetated biotreatment systems	☒
Other:	☐

The project proposes the use of Bioretention with underdrains to address storm water pollutants from 6 of the 7 onsite DMAs (DMA 1 through DMA 6). The remaining DMA (DMA 7), which consists of the majority of the site, will employ the use of a proprietary vegetated biotreatment system (Modular Wetland System or approved equivalent) to address storm water pollutants. The system will be designed as a detain (via subsurface vaults), filter/treat and release system.

The selected biofiltration BMPs have been designed per the TGD and the SOC Model WQMP, which require that volume provided in the pre-filter detention volume (surface storage) and pores of the biofiltration BMP may not be less than 75% of the DCV.

To address the project's pollutants of concern, in particularly the primary POCs, the bioretention facilities will be designed with a nutrient sensitive media, which would allow the units to provide a medium to high level of effectiveness at removing the project's storm water pollutants.

BIOFILTRATION DESIGN SUMMARY				
DMA	DCV (ft^3)	DCV Storage (ft^3)	BMP	Footprint Provided (ft^2)
1	24	300	Bioretention	443
2	79	436	Bioretention	365
3	41	167	Bioretention	199
4	23	99.5	Bioretention	304
5	48	135	Bioretention	862
6	69	321	Bioretention	642
7*	32,652	73,616	Proprietary Biofiltration	7,320

*DMA 7 consists of underground modular vaults for hydromodification and DCV storage prior to proprietary biofiltration.

The proposed proprietary biotreatment units for 48 hour drawdown time of the DCV are as follows:

Model/Footprint	Treatment Capacity for 48-hour Drawdown Time
MWS-L-8-12	15,109 ft^3
MWS-L-8-16	20,145 ft^3
Total Capacity	35,254 ft^3

IV.3.5 Hydromodification Control BMPs

The South Orange County Hydrology Model (SOCHM) was used to determine the project's hydromodification requirements.

HYDROMODIFICATION CONTROL BMPS	
BMP Name	BMP Description
Underground Detention	Underground detention system will be employed to address HCOC for the project. The proposed system will consist of two modular design vaults with minimum dimensions of 130'x30'x11' and 114'x30'x11'. Total storage volume required to address hydromodification and flood control is 1.43 acre-feet. Total provided is 1.69 acre-feet.

A summary of the Hydromodification Analysis is provided in the following tables. The full report is provided in Attachment C of this WQMP.

HYDROMODIFICATION ANALYSIS						
Condition	Drainage Area	Soil Type	Imp. Cover	Q_2 (cfs)	Q_5 (cfs)	Q_{10} (cfs)
Natural	16.93 Ac	D	10%	3.66	7.60	9.93
Developed	16.93 Ac	D	47%	2.82	6.46	8.11

IV.3.6 Regional/Sub-Regional LID BMPs

Not applicable. Project will incorporate onsite LID BMPs. Project will not participate in any regional/sub-regional programs.

IV.3.7 Treatment Control BMPs

Not applicable. Project will capture and treat all runoff onsite via LID BMPs.

Source Control BMPs

In accordance with the County DAMP and City of Laguna Niguel Local Implementation Plan (LIP), both structural and non-structural source control BMPs are required for all priority projects unless deemed not applicable based on project characteristics. The following tables summarize the source control BMPs (Non-Structural and Structural) specified in the County DAMP and City's LIP.

The following tables show source control BMPs (routine non-structural and routine structural) included in this project and those that were not included.

IV.3.8 Non-Structural Source Control BMPs

The Table below indicates all Non-Structural Source Control BMPs to be utilized in the project. Additional discussions of the selected BMPs are provided in the BMP Inspection and Maintenance Responsibility Matrix provided in Section V of this WQMP.

NON-STRUCTURAL SOURCE CONTROL BMPS				
Identifier	Name	Check One		If not applicable, state brief reason
		Included	Not Applicable	
N1	Education for Property Owners, Tenants and Occupants	☒	☐	
N2	Activity Restrictions	☒	☐	
N3	Common Area Landscape Management	☒	☐	
N4	BMP Maintenance	☒	☐	
N5	Title 22 CCR Compliance (How development will comply)	☐	☒	Proposed facility will not generate waste subject to Title 22 CCR compliance.
N6	Local Industrial Permit Compliance	☐	☒	Not applicable to residential.
N7	Spill Contingency Plan	☐	☒	Proposed facility will not generate waste or store materials subject to the requirements of Chapter 6.95 of the CA Health and Safety Code.
N8	Underground Storage Tank Compliance	☐	☒	No underground storage tanks proposed for the project.
N9	Hazardous Materials Disclosure Compliance	☐	☒	Proposed facility will not store or generate hazardous materials subject to agency requirements.
N10	Uniform Fire Code Implementation	☐	☒	Proposed facility does not propose to store toxic or highly toxic compressed gases.
N11	Common Area Litter Control	☒	☐	
N12	Employee Training	☐	☒	Not applicable for residential.
N13	Housekeeping of Loading Docks	☐	☒	No loading docks proposed for project.
N14	Common Area Catch Basin Inspection	☒	☐	
N15	Street Sweeping Private Streets and Parking Lots	☒	☐	
N16	Retail Gasoline Outlets	☐	☒	Project is for residential.

N1 – Education for Property Owners, Tenants and Occupants

Educational materials will be provided to homeowners at close of escrow by owner/developer and periodically thereafter by the HOA to inform them of their actions and the potential impacts to downstream water quality. Materials include those described in Section VII of this WQMP and any updates to educational materials.

N2 – Activity Restrictions

Activity restrictions to minimize potential impacts to water quality and with the purpose of protecting water quality will be prescribed by the project's Covenant, Conditions and Restrictions (CC&Rs), or other equally effective measure.

N3 – Common Area Landscape Management

Management programs will be designed and established by the developer. Upon project completion, the HOA will maintain all common areas within the project site. These programs will include how to mitigate the potential dangers of fertilizer and pesticide usage. Ongoing maintenance will be consistent with the City's Landscape Water Use Standards (Municipal Code Title 6, Div. 5, Art. 3).

N4 – BMP Maintenance

The Owner shall be responsible for implementation of each applicable non-structural, structural and LID BMPs as well as scheduling inspection and maintenance cleaning of all applicable structural BMP facilities. The Owner shall be responsible for inspection and maintenance activities in landscape areas (see WQMP Site Plan).

N11 – Common Area Litter Control

Weekly trash pickup and as necessary within all project areas and common landscape areas. Daily inspection of trash receptacles to ensure that lids are closed and pick up any excess trash on the ground, noting trash disposal violations by homeowners and reporting the violations to the Owner for investigation.

N14 – Common Area Catch Basin Inspection

As required by the TGD, at least 80% of all privately-maintained drainage facilities shall be inspected each year and, if necessary, cleaned and maintained prior to the storm season, no later than October 15th each year; 100 % of all privately-maintained drainage facilities shall be inspected, cleaned and maintained in a two year period. Drainage facilities include catch basins and inlets, detention vaults and the project's LID BMPs.

N15 – Street Sweeping Private Streets and Parking Lots

Per the TGD, private streets shall be swept at a minimum prior to the storm season, in early fall or late summer, and as needed.

Refer to Section V for implementation frequency and maintenance responsibilities.

IV.3.9 Structural Source Control BMPs

The source control BMPs have been selected in the following table to address the anticipated pollutants generated by the proposed project. These BMPs are designed to work in conjunction with the project's LID BMPs to minimize potential impacts to the site's receiving waters.

STRUCTURAL SOURCE CONTROL BMPS				
Identifier	Name	Check One		If not applicable, state brief reason
		Included	Not Applicable	
S1	Provide storm drain system stenciling and signage	☒	☐	
S2	Design and construct outdoor material storage areas to reduce pollution introduction	☐	☒	No outdoor storage areas proposed for facility.
S3	Design and construct trash and waste storage areas to reduce pollution introduction	☐	☒	
S4	Use efficient irrigation systems & landscape design, water conservation, smart controllers, and source control	☒	☐	
S5	Protect slopes and channels and provide energy dissipation	☒	☒	
	Incorporate requirements applicable to individual priority project categories (from SDRWQCB NPDES Permit)	☒	☐	
S6	Dock areas	☐	☒	No dock areas proposed for facility.
S7	Maintenance bays	☐	☒	No maintenance bays proposed for facility.
S8	Vehicle wash areas	☐	☒	No vehicle washing anticipated for proposed facility.
S9	Outdoor processing areas	☐	☒	No outdoor processing of good required for facility.
S10	Equipment wash areas	☐	☒	No wash areas for site.
S11	Fueling areas	☐	☒	No fueling areas in project scope.
S12	Hillside landscaping	☒	☐	
S13	Wash water control for food preparation areas	☐	☒	No applicable to residential.
S14	Community car wash racks	☐	☒	None proposed.

S1 – Provide Storm Drain System Stenciling and Signage (CASQA SD-13)

Storm drain stenciling with a brief message or graphical icons with symbols, prohibiting the dumping of improper materials into the storm drain system shall be placed in highly visible areas adjacent to all storm drain inlets. The BMP is designed to alert, educate and discourage the

public of the destination of pollutants discharged into storm drain systems. Legibility of stencils and signs shall be maintained.

S4 – Efficient Irrigation System & Landscape Design (CASQA SD-10 & SD-12)

Landscaping will be designed to consist of native species or drought tolerant, water conserving landscaping. Irrigation system will be designed, constructed and adjusted to eliminate overspray to hardscape areas, with timing and cycle lengths adjusted in accordance with water demands, given time of year, weather, day or night time temperatures based on system specifications and local climate patterns.

S5 – Project Slopes and Channels and Provide Energy Dissipation

The project's landscaped slopes shall be inspected for adequate vegetation cover, vegetation health and signs of erosion. Dead or dying vegetation shall be replaced as needed. Signs of erosion and concentrated flow areas shall be noted and repaired as needed. Rip-rap installed at the project's discharge locations to natural areas shall be inspected for damage and signs of erosion to ensure that project's discharge is controlled and offsite erosion potential minimized.

S12 – Hillside Landscaping

Hillside areas that are disturbed by project development shall be landscaped with deep-rooted, drought tolerant plant species selected for erosion control and consistent with County of Orange requirements and City of Laguna Niguel requirements.

IV.4 ALTERNATIVE COMPLIANCE PLAN (IF APPLICABLE)

The project is able to fully capture the design capture volume via onsite LID BMPs. Therefore, an alternative compliance plan is not applicable to this project.

IV.4.1 Request of Waiver of LID BMPs

Not applicable to project. Project will utilize LID BMPs to address storm water onsite.

IV.4.2 Water Quality Credits

Not applicable to project. Project will utilize LID BMPs to address storm water onsite.

DESCRIPTION OF PROPOSED PROJECT		
Project Types that Qualify for Water Quality Credits (Select all that apply):		
☐Redevelopment projects that reduce the overall impervious footprint of the project site.	☐Brownfield redevelopment, meaning redevelopment, expansion, or reuse of real property which may be complicated by the presence or potential presence of hazardous substances, pollutants or contaminants, and which have the potential to contribute to adverse ground or surface WQ if not redeveloped.	☐ Higher density development projects which include two distinct categories (credits can only be taken for one category): those with more than seven units per acre of development (lower credit allowance); vertical density developments, for example, those with a Floor to Area Ratio (FAR) of 2 or those having more than 18 units per acre (greater credit allowance).

DESCRIPTION OF PROPOSED PROJECT				
Project Types that Qualify for Water Quality Credits (Select all that apply):				
☐ Mixed use development, such as a combination of residential, commercial, industrial, office, institutional, or other land uses which incorporate design principles that can demonstrate environmental benefits that would not be realized through single use projects (e.g. reduced vehicle trip traffic with the potential to reduce sources of water or air pollution).		☐ Transit-oriented developments, such as a mixed use residential or commercial area designed to maximize access to public transportation; similar to above criterion, but where the development center is within one half mile of a mass transit center (e.g. bus, rail, light rail or commuter train station). Such projects would not be able to take credit for both categories, but may have greater credit assigned		☐ Redevelopment projects in an established historic district, historic preservation area, or similar significant city area including core City Center areas (to be defined through mapping).
☐Developments with dedication of undeveloped portions to parks, preservation areas and other pervious uses.	☐ Developments in a city center area.	☐ Developments in historic districts or historic preservation areas.	☐ Live-work developments, a variety of developments designed to support residential and vocational needs together – similar to criteria to mixed use development; would not be able to take credit for both categories.	☐ In-fill projects, the conversion of empty lots and other underused spaces into more beneficially used spaces, such as residential or commercial areas.
Calculation of Water Quality Credits (if applicable)	N/A			

IV.4.3 Treatment Control BMPs

Not applicable to project. Project will utilize LID BMPs for to address storm water pollutants onsite.

IV.4.3 Other Alternative Compliance Measures

Not applicable to project. Project will utilize LID BMPs for to address storm water pollutants onsite.

Section V Inspection/Maintenance Responsibility for BMPs

It has been determined that the Owner, Euland Capital Enterprises, LLC, shall assume all BMP funding, inspection and maintenance responsibilities for the VTTM No. 17433 project.

Contact/Title	David Shieh, President
Company	Euland Capital Enterprises, LLC
Address	59 Honeyflower, Irvine, CA 92620
Email	eulandcapital@yahoo.com
Telephone #	(949) 293-2246

The owner shall verify BMP implementation and ongoing maintenance through inspection, self-certification or other equally effective measure. The certification shall verify that the inspection and maintenance of all BMPs are performed in accordance to the requirements of this WQMP.

The BMP Inspection and Maintenance Responsibility Matrix is provided in the following table. An Operations and Maintenance (O&M) Plan will be finalized and included as an attachment in the Final WQMP.

BMP INSPECTION/MAINTENANCE			
BMP	Responsible Party(s)	Inspection/ Maintenance Activities Required	Minimum Frequency of Activities
HYDROLOGIC SOURCE CONTROL BMPs			
HSC-3 Street Trees	Owner	Conduct general inspection and maintenance monthly per routine landscaping maintenance activities. Trim trees as needed. Conduct bi-annual tree health evaluations.	Monthly/Semi-Annual
BIOFILTRATION BMPs			
BIO-1 Bioretention	Owner	Conduct general inspection and maintenance monthly per routine landscaping maintenance activities. Trim vegetation as needed. Conduct bi-annual tree health evaluations. Replace mulch cover as necessary to maintain desired mulch height (3-4")	Monthly/Semi-Annual

BMP INSPECTION/MAINTENANCE			
BMP	Responsible Party(s)	Inspection/ Maintenance Activities Required	Minimum Frequency of Activities
BIO-7 Proprietary Biotreatment	Owner	Inspect prior to rainy season and after rain season for accumulated debris/sediment in pre-treatment chamber. If necessary, remove accumulated debris/sediment from pre-treatment chamber (vactor truck or other effective methods). Replace pre-filter as needed. Inspect plant health and trim as needed. Each maintenance visit shall consist of the following:	Semi-Annual inspection, weekly with landscaping and per manufacturer's recommendations
NON-STRUCTURAL SOURCE CONTROL BMPs			
N1 – Education for Property Owners, Tenants and Occupants	Owner	Educational materials will be provided to homeowners at close of escrow by the developer and thereafter on an annual basis by the HOA. Materials shall include those shown in Section VII of this WQMP.	At close of escrow and Annually
N2 – Activity Restrictions	HOA	Owner will prescribe activity restrictions to protect surface water quality, through a Covenant, Conditions and Restrictions (CC&Rs) agreement, or other equally effective measure, for the property. Upon takeover of site responsibilities by the HOA. The HOA shall be responsible for ensuring residents compliance.	Ongoing

BMP INSPECTION/MAINTENANCE			
BMP	Responsible Party(s)	Inspection/ Maintenance Activities Required	Minimum Frequency of Activities
N3 – Common Area Landscape Management	Owner	Maintenance shall be consistent with County requirements; any fertilizer and/or pesticide usages shall be consistent with County guidelines for use of fertilizers and pesticides (OC DAMP Section 5.5). Maintenance includes mowing, weeding, and debris removal on a weekly basis. Trimming, replanting and replacement of mulch shall be performed on an as-needed basis. Trimmings, clippings, and other waste shall be properly disposed of off-site in accordance with local regulations. Materials temporarily stockpiled during maintenance activities shall be placed away from water courses and drain inlets.	Monthly and as needed
N4 – BMP Maintenance	Owner	Maintenance of BMPs implemented at the project site shall be performed at the frequency prescribed in this WQMP. Records of inspections and BMP maintenance shall be maintained by the responsible party and documented with the WQMP, and shall be available for review upon request.	Ongoing
N11 – Common Area Litter control	Owner	Litter patrol, violations investigation, reporting and other litter control activities shall be performed in by the Owner in conjunction with maintenance activities for common areas.	Weekly/Daily

BMP INSPECTION/MAINTENANCE			
BMP	Responsible Party(s)	Inspection/ Maintenance Activities Required	Minimum Frequency of Activities
N14 – Common Area Catch Basin Inspection	Owner	Catch basin inlets, area drains, curb-and-gutter systems and other drainage systems shall be inspected prior to October 1st of each year and after large storm events. If necessary, drains shall be cleaned prior to any succeeding rain events. 80% of private facilities shall be inspected and cleaned annually, with 100% of private facilities inspected and maintained within a 2-year period.	Annually
N15 – Street Sweeping Private Streets	HOA	Private streets shall be vacuum swept at a minimum prior to the storm season, in early fall or late summer, and as needed.	Annually and as needed
STRUCTURAL SOURCE CONTROL BMPs			
S1– Provide storm drain system stencilling and signage	Owner	As a part of the final civil engineering drawings, it will be required by the Developer to stencil on all of the project's catch basins, where applicable in paved areas, the words, "No Dumping - Drains to Ocean." Storm drain stencils shall be inspected for legibility, at minimum, once prior to the storm season, no later than October 1st each year. Those determined to be illegible will be re-stenciled as soon as possible.	Annually

BMP INSPECTION/MAINTENANCE			
BMP	Responsible Party(s)	Inspection/ Maintenance Activities Required	Minimum Frequency of Activities
S4 – Use efficient irrigation systems & landscape design, water conservation, smart controllers, and source control	Owner	In conjunction with routine maintenance activities, verify that landscape design continues to function properly by adjusting properly to eliminate overspray to hardscape areas, and to verify that irrigation timing and cycle lengths are adjusted in accordance with water demands, given time of year, weather, day or night time temperatures based on system specifications and local climate patterns.	Monthly
S5 – Project Slopes and Channels	Owner	Lined concrete drains and down drains will be constructed on slope areas to convey runoff safely from top of slopes and to prevent storm and irrigation runoff from discharging in an uncontrolled manner, thereby causing erosion. Runoff from the slope areas will be conveyed to either the storm drain system or to outlet dissipation devices to prevent scouring and erosion. All slope areas will have at least 70% vegetative cover consisting of native and/or drought tolerant plant species with a deep root system. These areas will be inspected on a monthly basis for signs of erosion and plant health.	Monthly
S12 – Hillside Landscaping	Owner	Hillside areas that are disturbed by project development shall be landscaped with deep-rooted, drought tolerant plant species selected for erosion control and consistent with County of Orange requirements and City of Laguna Niguel requirements. Areas shall be inspected per guidelines provided in N3.	Monthly

Section VI Site Plan and Drainage Plan

The exhibits provided in this section are to illustrate the post construction BMPs prescribed within this WQMP. Drainage flow information of the proposed project, such as general surface flow lines, concrete or other surface drainage conveyances, and storm drain facilities are also depicted. All structural source control and LID BMPs are shown as well.

Exhibits

- Vicinity Map
- WQMP Site Plan Exhibit

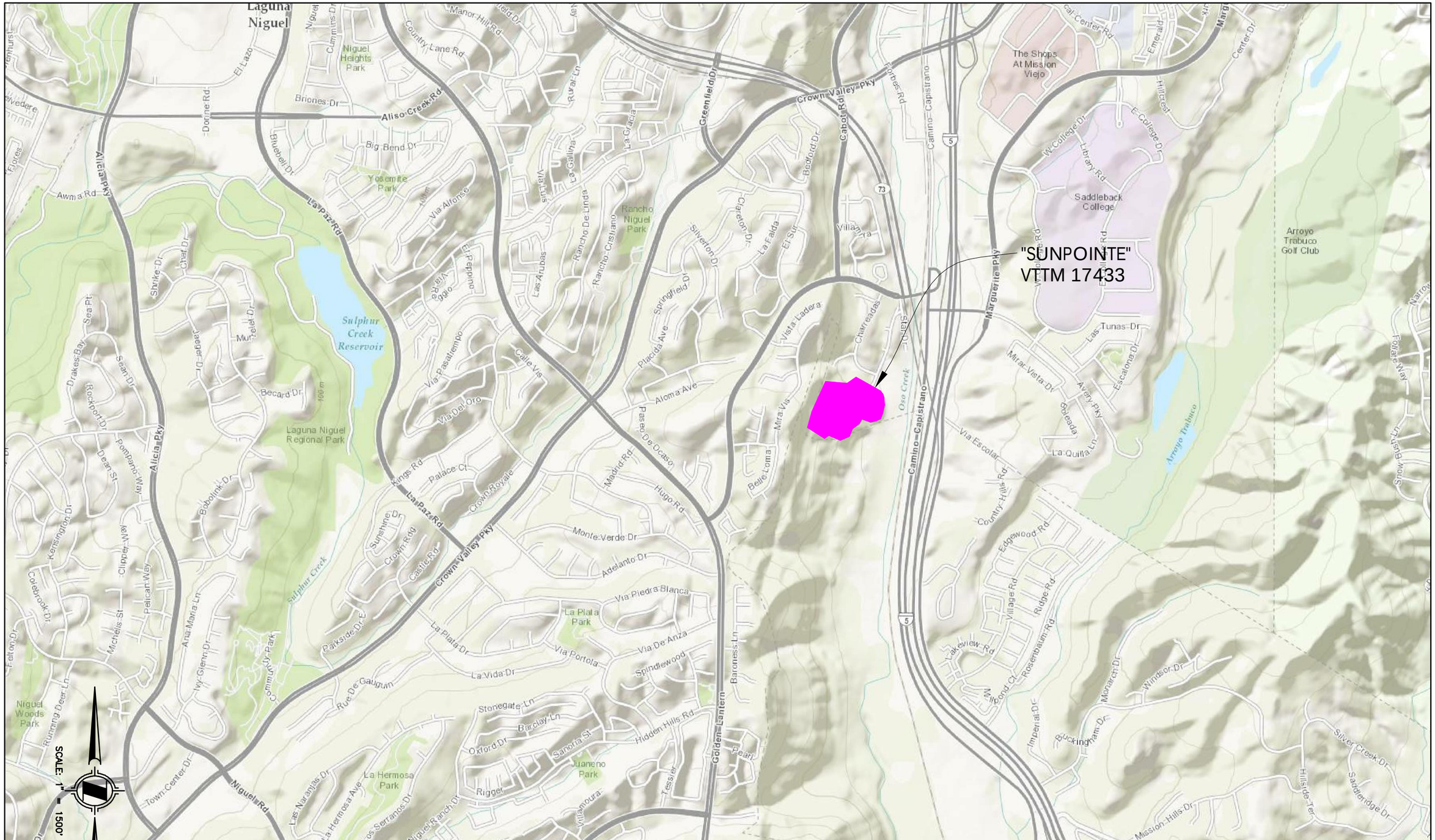

DRAWN BY: TIH	PREPARED BY: HUNSAKER & ASSOCIATES IRVINE, INC. PLANNING ▪ ENGINEERING ▪ SURVEYING Three Hughes, Irvine, CA 92618 ▪ PH: (949) 583-1010 ▪ FX: (949) 583-0759	PREPARED FOR: EULAND CAPITAL ENTERPRISES, LLC. 59 HONEYFLOWER IRVINE, CA 92620 TELEPHONE: (949) 293-2246	"SUNPOINTE" VESTING TENTATIVE TRACT MAP NO. 17433 APN 637-071-001 TO 637-071-036 LOCATED SOUTH OF AVENIDA DEL CABALLOS AND CHARREADAS CITY OF LAGUNA NIGUEL, CA
DATE: 08/27/14			CONCEPTUAL WQMP VICINITY MAP
REVISED:			
W.O. #: 2950-5			

PLOTTED BY: Tommy Hsu DATE: Aug. 28, 2014 02:19:39 PM FILE: F:\0178\Planning\SY_WQ\WQMP\EXHIBITS\WQMP VIC 17433.dwg

LEGEND

- TRACT BOUNDARY
- DRAINAGE MANAGEMENT AREA (DMA) BOUNDARY
- NAP — NOT A PART
- DIRECTION OF SURFACE FLOW (ONSITE)
- DIRECTION OF SURFACE FLOW (OFFSITE)
- PROPOSED STORM DRAIN AND FLOW
- DMA/AREA (AC)
- PROPOSED CATCH BASIN WITH BMPS
  S1 STORM DRAIN SYSTEM STENCILING/SIGNAGE
- SUBSURFACE DETENTION VAULT
- LANDSCAPE AREAS (PRIVATE) WITH BMP's
  S4 SITE DESIGN & LANDSCAPE PLANNING, EFFICIENT IRRIGATION SYSTEM
- LANDSCAPE SLOPES (PRIVATE) WITH BMP's
  S4 SITE DESIGN & LANDSCAPE PLANNING, EFFICIENT IRRIGATION SYSTEM
  S5 PROTECT SLOPES
  S12 HILLSIDE LANDSCAPING
- BIO-1 BIORETENTION WITH UNDERDRAINS
  MISC-1 PLANTING/SOIL MEDIA
  MISC-2 AMENDED SOIL
- BIO-7 PROPRIETARY BIOTREATMENT
- POINT OF COMPLIANCE/DISCHARGE POINT

ELEVATION VIEW

PLAN VIEW

BIO-7 PROPRIETARY BIOTREATMENT
TYPICAL SECTION DETAIL
N.T.S.

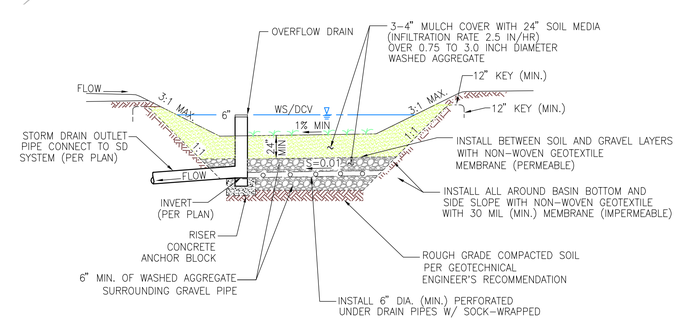

BIO-1 BIORETENTION WITH UNDERDRAIN
TYPICAL SECTION DETAIL
N.T.S.

DRAWN BY: TIH DATE: 08/27/14 REVISED: 01/15/15 W.O. #: 2950-5	PREPARED BY: HUNSAKER & ASSOCIATES IRVINE, INC. PLANNING ▪ ENGINEERING ▪ SURVEYING Three Hughes, Irvine, CA 92618 ▪ PH: (949) 583-1010 ▪ FX: (949) 583-0759	PREPARED FOR: EULAND CAPITAL ENTERPRISES, LLC. 59 HONEYFLOWER IRVINE, CA 92620 TELEPHONE: (949) 293-2246	"SUNPOINTE" - VTTM 17433 APN 637-071-001 TO 637-071-036 LOCATED SOUTH OF AVENIDA DEL CABALLOS AND CHARREADAS CITY OF LAGUNA NIGUEL, CA	CONCEPTUAL WQMP SITE PLAN

PLOTTED BY: Tommy Hsu DATE: Jan. 15, 2015 10:53:51 AM FILE: \\ashur\projects\0178\Planning\SY_WQ\WQMP\EXHIBITS\WQMP SP 17433.dwg

Section VII Educational Materials Included

EDUCATION MATERIALS			
Residential Material (http://www.ocwatersheds.com)	Check If Applicable	Business Material (http://www.ocwatersheds.com)	Check If Applicable
The Ocean Begins at Your Front Door	☒	Tips for the Automotive Industry	☐
Tips for Car Wash Fund-raisers	☐	Tips for Using Concrete and Mortar	☐
Tips for the Home Mechanic	☒	Tips for the Food Service Industry	☐
Homeowners Guide for Sustainable Water Use	☒	Proper Maintenance Practices for Your Business	☐
Household Tips	☒	Other Material	Check If Attached
Proper Disposal of Household Hazardous Waste	☒		
Recycle at Your Local Used Oil Collection Center (North County)	☐		☐
Recycle at Your Local Used Oil Collection Center (Central County)	☐		☐
Recycle at Your Local Used Oil Collection Center (South County)	☒		☐
Tips for Maintaining a Septic Tank System	☐		☐
Responsible Pest Control	☒		☐
Sewer Spill	☐		☐
Tips for the Home Improvement Projects	☒		☐
Tips for Horse Care	☐		☐
Tips for Landscaping and Gardening	☒		☐
Tips for Pet Care	☒		☐
Tips for Pool Maintenance	☐		☐
Tips for Residential Pool, Landscape and Hardscape Drains	☒		☐
Tips for Projects Using Paint	☒		☐

Attachment A

Educational Materials

(Provided at Final WQMP)

Attachment B

BMP Worksheets/Calculations

BMP Details

BIO-1 – Bioretention/Rain Garden with Underdrains

BIO-7 – Proprietary Biotreatment

Table 2.7: Infiltration BMP Feasibility Worksheet

	Infeasibility Criteria	*Yes*	*No*
1	**Would Infiltration BMPs pose significant risk for groundwater related concerns?** Refer to Appendix VII (Worksheet I) for guidance on groundwater-related infiltration feasibility criteria.		X
Provide basis: Summarize findings of studies provide reference to studies, calculations, maps, data sources, etc. Provide narrative discussion of study/data source applicability.			
2	Would Infiltration BMPs **pose significant risk of increasing risk of geotechnical hazards that cannot be mitigated to an acceptable level**? (Yes if the answer to any of the following questions is yes, as established by a geotechnical expert): The BMP can only be located less than 50 feet away from slopes steeper than 15 percent The BMP can only be located less than eight feet from building foundations or an alternative setback. A study prepared by a geotechnical professional or an available watershed study substantiates that stormwater infiltration would potentially result in significantly increased risks of geotechnical hazards that cannot be mitigated to an acceptable level.	X	
Provide basis: Project has steep slopes with clay soils. Additionally, project site is currently dewatered on a regular basis via an installed well to maintain site stability. See geotechnical report for project site.			
3	Would infiltration of the DCV from drainage area **violate downstream water rights**?		X
Provide basis: Summarize findings of studies provide reference to studies, calculations, maps, data sources, etc. Provide narrative discussion of study/data source applicability.			

Table 2.7: Infiltration BMP Feasibility Worksheet (continued)

	Partial Infeasibility Criteria	*Yes*	*No*
4	Is proposed infiltration facility **located on HSG D soils** or the site geotechnical investigation identifies presence of soil characteristics which support categorization as D soils?	X	
Provide basis: Based on previous soils report as well as TGD maps.			
5	Is **measured infiltration rate below proposed facility less than 0.3 inches per hour**? This calculation shall be based on the methods described in Appendix VII.	Not available	Not available
Provide basis: Not known. Percolation test has not been conducted.			
6	Would **reduction of over predeveloped conditions cause impairments to downstream beneficial uses, such as change of seasonality of ephemeral washes or increased discharge of contaminated groundwater to surface waters?**		X
Provide citation to applicable study and summarize findings relative to the amount of infiltration that is permissible:			
7	Would **an increase in infiltration over predeveloped conditions cause impairments to downstream beneficial uses, such as change of seasonality of ephemeral washes or increased discharge of contaminated groundwater to surface waters?**		X
Provide citation to applicable study and summarize findings relative to the amount of infiltration that is permissible:			

Infiltration Screening Results (check box corresponding to result):		
8	Is there substantial evidence that infiltration from the project would result in a significant increase in I&I to the sanitary sewer that cannot be sufficiently mitigated? (See Appendix XVII) Provide narrative discussion and supporting evidence: Summarize findings of studies provide reference to studies, calculations, maps, data sources, etc. Provide narrative discussion of study/data source applicability.	No
9	If any answer from row 1-3 is yes: infiltration of any volume is **not feasible** within the DMA or equivalent. Provide basis: Item 2 is yes. Project site is located on hillside. Summarize findings of infeasibility screening: Based on questions 1-3, infiltration is not feasible for the project due to the project's location as well as the underlying soils. See soils report for additional information regarding underlying soils as well as dewatering wells currently located onsite for site stability.	Item 2 is yes.
10	If any answer from row 4-7 is yes, infiltration is **permissible but is not presumed to be feasible for the entire DCV.** Criteria for designing biotreatment BMPs to achieve the maximum feasible infiltration and ET shall apply. Provide basis: Summarize findings of infeasibility screening	
11	If all answers to rows 1 through 11 are no, infiltration of the full DCV is potentially feasible, BMPs must be designed to infiltrate the full DCV to the maximum extent practicable.	

Worksheet B: Simple Design Capture Volume Sizing Method – DMA 1-7

Step 1: Determine the design capture storm depth used for calculating volume				
1	Enter design capture storm depth from Figure III.1, *d* (inches)	d=	0.85	inches
2	Enter the effect of provided HSCs, d_{HSC} (inches) (Worksheet A)	d_{HSC}=	0.85	inches
3	Calculate the remainder of the design capture storm depth, $d_{remainder}$ (inches) (Line 1 – Line 2)	$d_{remainder}$=	0	inches
Step 2: Calculate the DCV				
1	Enter Project area tributary to BMP (s), *A* (acres)	A=	See table below	acres
2	Enter Project Imperviousness, *imp* (unitless)	imp=	See table below	
3	Calculate runoff coefficient, $C= (0.75 \times imp) + 0.15$	C=	See table below	
4	Calculate runoff volume, $V_{design} = (C \times d_{remainder} \times A \times 43560 \times (1/12))$	V_{design}=	See table below	cu-ft
Step 3: Design BMPs to ensure full retention of the DCV				
Step 3a: Determine design infiltration rate				
1	Enter measured infiltration rate, $K_{measured}$ (in/hr) (Appendix VII)	$K_{measured}$=	N/A	In/hr
2	Enter combined safety factor from Worksheet H, S_{final} (unitless)	S_{final}=	N/A	
3	Calculate design infiltration rate, $K_{design} = K_{measured} / S_{final}$	K_{design}=	N/A	In/hr
Step 3b: Determine minimum BMP footprint				
4	Enter drawdown time, *T* (max 48 hours)	T=	N/A	Hours
5	Calculate max retention depth that can be drawn down within the drawdown time (feet), $D_{max} = K_{design} \times T \times (1/12)$	D_{max}=	N/A	feet
6	Calculate minimum area required for BMP (sq-ft), $A_{min} = V_{design} / d_{max}$	A_{min}=	N/A	sq-ft
Calculations				

DMA	Area (Ac.)	% Imp.	C-value	Design Storm Depth (in.)	Simple Method DCV (ft^3)
1	0.017	41	0.4575	0.85	24
2	0.035	77	0.7275	0.85	79
3	0.019	74	0.705	0.85	41
4	0.014	50	0.525	0.85	23
5	0.034	41	0.4575	0.85	48
6	0.037	60	0.6	0.85	69
7	17.0	63	0.6225	0.85	32,652

Worksheet SOC-1: Calculating Provided Biofiltration Volume as a Fraction of Remaining DCV

Step 1: Determine the remaining DCV				
1	Enter total DCV for DMA (see Section III.1)	DCV	See table below	cu-ft
2	Enter the DCV that has already been retained in the DMA (either upstream of BMP or in sump below outlet of BMP)	$V_{retained}$	See table below	cu-ft
3	Enter the DCV that has already been retained (either upstream of BMP (such as by HSCs) or in sump below outlet of BMP) (Line 1- Line 2)	DCV_{remain}	See table below	cu-ft
Step 2: Compare pre-filter detention volume plus pore volume to remaining DCV				
4	Enter BMP ponding volume based on proposed BMP design (for simple designs, multiple effective footprint area by the ponding depth to estimate volume)	V_{pond}	See table below	cu-ft
5	Enter any additional pre-filter detention volume provided, such as in a cistern or tank.	V_{detain}	See table below	cu-ft
6	Enter BMP available pore space volume by multiplying soil and gravel volumes by respective available porosity. Available porosity should be estimated based on material properties. In general, available pore space of 0.2 for amended media and 0.4 for open graded drain rock are considered to be reasonable.	V_{pores}	See table below	cu-ft
7	Calculate total pre-filter detention plus pore volume (add Lines 4 through 6)	$V_{pond\ to\ pores}$	See table below	cu-ft
8	Calculate total pre-filter plus pore volume as fraction of remaining DCV (Line 7 divided by Line 3)		See table below	Unitless
9	Does pre-filter detention plus pore volume greater than 0.75 of remaining DCV? Enter Y or N		Yes	Y or No

Calculations

Provide description of system and/or calculations justifying the volumes entered under Step 2.

DMA	Simple Method DCV	(4) V_{POND}	(5) V_{DETAIN}	(6) V_{PORE}	(7) $V_{POND, DETAIN, PORE}$	(7)/DCV*
1	$24ft^3$	$443ft^2$ x 0.5ft = $222ft^3$	--	--	$300ft^3$	12.5
2	$79ft^3$	$365ft^2$ x 0.5ft = $182ft^3$	--	--	$436ft^3$	5.52
3	$41ft^3$	$199ft^2$ x 0.5ft = $100ft^3$	--	--	$167ft^3$	4.1
4	$23ft^3$	$304ft^2$ x 0.5ft = $152ft^3$	--	--	$99.5ft^3$	4.3
5	$48ft^3$	$862ft^2$ x 0.5ft = $431ft^3$	--	--	$135ft^3$	2.8
6	$69ft^3$	$642ft^2$ x 0.5ft = $321ft^3$	--	--	$321ft^3$	4.7
7	$32,652ft^3$	$3420ft^2$ x 11ft = $37,620ft^3$ $3900ft^2$ x 11ft = $42,900ft^3$	--	--	**$80,520ft^3$	2.4

*BMP ponding volume designed based on simple DCV method. Therefore, BMP is consistently able to meet 0.75 DCV requirement of SOC WQMP.
**Value estimates approximately 9% unusable storage volume due to modular system walls.

XIV.5. Biotreatment BMP Fact Sheets (BIO)

Conceptual criteria for biotreatment BMP selection, design, and maintenance are contained in **Appendix XII**. These criteria are generally applicable to the design of biotreatment BMPs in Orange County and BMP-specific guidance is provided in the following fact sheets. [24]

*Note: Biotreatment BMPs shall be designed to provide the maximum feasible infiltration and ET based on criteria contained in **Appendix XI.2**.*

BIO-1: Bioretention with Underdrains

Bioretention stormwater treatment facilities are landscaped shallow depressions that capture and filter stormwater runoff. These facilities function as a soil and plant-based filtration device that removes pollutants through a variety of physical, biological, and chemical treatment processes. The facilities normally consist of a ponding area, mulch layer, planting soils, and plants. As stormwater passes down through the planting soil, pollutants are filtered, adsorbed, biodegraded, and sequestered by the soil and plants. Bioretention with an underdrain are utilized for areas with low permeability native soils or steep slopes where the underdrain system that routes the treated runoff to the storm drain system rather than depending entirely on infiltration. **Bioretention must be designed without an underdrain** in areas of high soil permeability.

Also known as:

- *Rain gardens with underdrains*
- *Vegetated media filter*
- *Downspout planter boxes*

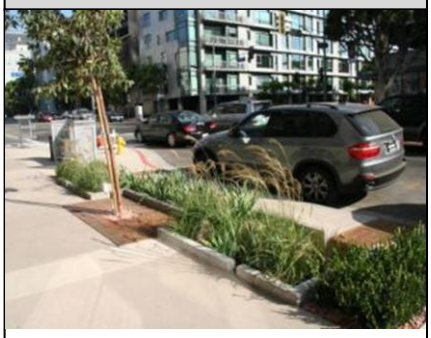

Bioretention
Source: Geosyntec Consultants

Feasibility Screening Considerations

- If there are no hazards associated with infiltration (such as groundwater concerns, contaminant plumes or geotechnical concerns), **bioinfiltration facilities**, which achieve partial infiltration, should be used to maximize infiltration.

[24] Not all BMPs presented in this section are considered "biofiltration BMPs" under the South Orange County Permit Area. Biofiltration BMPs are vegetated treat-and-release BMPs that filter stormwater through amended soil media that is biologically active, support plant growth, and also promote infiltration and/or evapotranspiration. For projects in South Orange County, the total volume of storage in surface ponding and pores spaces is required to be at least 75% of the remaining DCV that the biofiltration BMP is designed to address. This prevents significant down-sizing of BMPs which otherwise may be possible via routing calculations. Biotreatment BMPs that do not meet this definition are not considered to be LID BMPs, but may be used as treatment control or pre-treatment BMPs. See Section III.7 and Worksheet SOC-1 for guidance.

- Bioretention with underdrain facilities should be lined if contaminant plumes or geotechnical concerns exist. If high groundwater is the reason for infiltration infeasibility, bioretention facilities with underdrains do not need to be lined.

Opportunity Criteria

- Land use may include commercial, residential, mixed use, institutional, and subdivisions. Bioretention may also be applied in parking lot islands, cul-de-sacs, traffic circles, road shoulders, road medians, and next to buildings in planter boxes.
- Drainage area is ≤ 5 acres.
- Area is available for infiltration.
- Site must have adequate relief between land surface and the stormwater conveyance system to permit vertical percolation through the soil media and collection and conveyance in underdrain to stormwater conveyance system.

OC-Specific Design Criteria and Considerations

☐ Ponding depth should not exceed 18 inches; fencing may be required if ponding depth is greater than 6 inches to mitigate drowning.

☐ The minimum soil depth is 2 feet (3 feet is preferred).

☐ The maximum drawdown time of the bioretention ponding area is 48 hours. The maximum drawdown time of the planting media and gravel drainage layer is 96 hours, if applicable.

☐ Infiltration pathways may need to be restricted due to the close proximity of roads, foundations, or other infrastructure. A geomembrane liner, or other equivalent water proofing, may be placed along the vertical walls to reduce lateral flows. This liner should have a minimum thickness of 30 mils.

☐ If infiltration in bioretention location is hazardous due to groundwater or geotechnical concerns, a geomembrane liner must be installed at the base of the bioretention facility. This liner should have a minimum thickness of 30 mils.

☐ The planting media placed in the cell shall be designed per the recommendations contained in MISC-1: Planting/Storage Media

☐ Plant materials should be tolerant of summer drought, ponding fluctuations, and saturated soil conditions for 48 hours; native place species and/or hardy cultivars that are not invasive and do not require chemical inputs should be used to the maximum extent feasible

☐ The bioretention area should be covered with 2-4 inches (average 3 inches) or mulch at the start and an additional placement of 1-2 inches of mulch should be added annually.

☐ Underdrain should be sized with a 6 inch minimum diameter and have a 0.5% minimum slope. Underdrain should be slotted polyvinyl chloride (PVC) pipe; underdrain pipe should be more than 5 feet from tree locations (if space allows).

☐ A gravel blanket or bedding is required for the underdrain pipe(s). At least 0.5 feet of washed aggregate must be placed below, to the top, and to the sides of the underdrain pipe(s).

☐ An overflow device is required at the top of the bioretention area ponding depth.

☐ Dispersed flow or energy dissipation (i.e. splash rocks) for piped inlets should be provided at basin inlet to prevent erosion.

☐ Ponding area side slopes shall be no steeper than 3:1 (H:V) unless designed as a planter box BMP with appropriate consideration for trip and fall hazards.

Simple Sizing Method for Bioretention with Underdrain

If the Simple Design Capture Volume Sizing Method described in **Appendix III.3.1** is used to size a bioretention with underdrain facility, the user selects the basin depth and then determines the appropriate surface area to capture the DCV. The sizing steps are as follows:

Step 1: Determine DCV

Calculate the DCV using the Simple Design Capture Volume Sizing Method described in **Appendix III.3.1**.

Step 2: Verify that the Ponding Depth will Draw Down within 48 Hours

The ponding area drawdown time can be calculated using the following equation:

$DD_P = (d_P / K_{MEDIA}) \times 12$ in/ft

Where:

DD_P = time to drain ponded water, hours

d_P = depth of ponding above bioretention area, ft (not to exceed 1.5 ft)

K_{MEDIA} = media design infiltration rate, in/hr (equivalent to the media hydraulic conductivity with a factor of safety of 2; K_{MEDIA} of 2.5 in/hr should be used unless other information is available)

If the drawdown time exceeds 48 hours, adjust ponding depth and/or media infiltration rate until 48 hour drawdown time is achieved.

Step 3: Determine the Depth of Water Filtered During Design Capture Storm

The depth of water filtered during the design capture storm can be estimated as the amount routed through the media during the storm, or the ponding depth, whichever is smaller.

$d_{FILTERED}$ = Minimum [$((K_{MEDIA} \times T_{ROUTING})/12)$, d_P]

Where:

$d_{FILTERED}$ = depth of water that may be considered to be filtered during the design storm event, ft

K_{MEDIA} = media design infiltration rate, in/hr (equivalent to the media hydraulic conductivity with a factor of safety of 2; K_{MEDIA} of 2.5 in/hr should be used unless other information is available)

$T_{ROUTING}$ = storm duration that may be assumed for routing calculations; this should be assumed to be no greater than 3 hours. If the designer desires to account for further routing effects, the Capture Efficiency Method for Volume-Based, Constant Drawdown BMPs (See **Appendix III.3.2**) should be used.

d_P = depth of ponding above bioretention area, ft (not to exceed 1.5 ft)

Step 4: Determine the Facility Surface Area

$A = DCV/ (d_P + d_{FILTERED})$

Where:

A = required area of bioretention facility, sq-ft

DCV = design capture volume, cu-ft

$d_{FILTERED}$ = depth of water that may be considered to be filtered during the design storm event, ft

d_P = depth of ponding above bioretention area, ft (not to exceed 1.5 ft)

In South Orange County, the provided ponding plus pore volume must be checked to demonstrate that it is greater than 0.75 of the remaining DCV that this BMP is designed to address. See Section III.7 and Worksheet SOC-1.

Capture Efficiency Method for Bioretention with Underdrains

If the bioretention geometry has already been defined and the user wishes to account more explicitly for routing, the user can determine the required footprint area using the Capture Efficiency Method for Volume-Based, Constant Drawdown BMPs (See **Appendix III.3.2**) to determine the fraction of the DCV that must be provided to manage 80 percent of average annual runoff volume. This method accounts for drawdown time different than 48 hours.

Step 1: Determine the drawdown time associated with the selected basin geometry

$DD = (d_p / K_{DESIGN}) \times 12$ in/ft

Where:

DD = time to completely drain infiltration basin ponding depth, hours

d_P = bioretention ponding depth, ft (should be less than or equal to 1.5 ft)

K_{DESIGN} = design media infiltration rate, in/hr (assume 2.5 inches per hour unless otherwise proposed)

If drawdown is less than 3 hours, the drawdown time should be rounded to 3 hours or the Capture Efficiency Method for Flow-based BMPs (See **Appendix III.3.3**) shall be used.

Step 2: Determine the Required Adjusted DCV for this Drawdown Time

Use the Capture Efficiency Method for Volume-Based, Constant Drawdown BMPs (See **Appendix III.3.2**) to calculate the fraction of the DCV the basin must hold to achieve 80 percent capture of average annual stormwater runoff volume based on the basin drawdown time calculated above.

Step 3: Determine the Basin Infiltrating Area Needed

The required infiltrating area (i.e. the surface area of the top of the media layer) can be calculated using the following equation:

$A = \text{Design Volume} / d_p$

Where:

A = required infiltrating area, sq-ft (measured at the media surface)

Design Volume = fraction of DCV, adjusted for drawdown, cu-ft (see Step 2)

d_p = ponding depth of water stored in bioretention area, ft (from Step 1)

This does not include the side slopes, access roads, etc. which would increase bioretention footprint. If the area required is greater than the selected basin area, adjust surface area or adjust ponding depth and recalculate required area until the required area is achieved.

In South Orange County, the provided ponding plus pore volume must be checked to demonstrate that it is greater than 0.75 of the remaining DCV that this BMP is designed to address. See Section III.7 and Worksheet SOC-1.

Configuration for Use in a Treatment Train

- Bioretention areas may be preceeded in a treatment train by HSCs in the drainage area, which would reduce the required design volume of the bioretention cell. For example, bioretention could be used to manage overflow from a cistern.
- Bioretention areas can be used to provide pretreatment for underground infiltration systems.

Additional References for Design Guidance

- CASQA BMP Handbook for New and Redevelopment: **http://www.cabmphandbooks.com/Documents/Development/TC-32.pdf**

- SMC LID Manual (pp 68): **http://www.lowimpactdevelopment.org/guest75/pub/All_Projects/SoCal_LID_Manual/SoCalLID_Manual_FINAL_040910.pdf**
- Los Angeles County Stormwater BMP Design and Maintenance Manual, Chapter 5: **http://dpw.lacounty.gov/DES/design_manuals/StormwaterBMPDesignandMaintenance.pdf**
- San Diego County LID Handbook Appendix 4 (Factsheet 7): **http://www.sdcounty.ca.gov/dplu/docs/LID-Appendices.pdf**

  Los Angeles Unified School District (LAUSD) Stormwater Technical Manual, Chapter 4: **http://www.laschools.org/employee/design/fs-studies-and-reports/download/white_paper_report_material/Storm_Water_Technical_Manual_2009-opt-red.pdf?version_id=76975850**
- County of Los Angeles Low Impact Development Standards Manual, Chapter 5: **http://dpw.lacounty.gov/wmd/LA_County_LID_Manual.pdf**

BIO-7: Proprietary Biotreatment

Proprietary biotreatment devices are devices that are manufactured to mimic natural systems such as bioretention areas by incorporating plants, soil, and microbes engineered to provide treatment at higher flow rates or volumes and with smaller footprints than their natural counterparts. Incoming flows are typically filtered through a planting media (mulch, compost, soil, plants, microbes, etc.) and either infiltrated or collected by an underdrain and delivered to the storm water conveyance system. Tree box filters are an increasingly common type of proprietary biotreatment device that are installed at curb level and filled with a bioretention type soil. For low to moderate flows they operate similarly to bioretention systems and are bypassed during high flows. Tree box filters are highly adaptable solutions that can be used in all types of development and in all types of soils but are especially applicable to dense urban parking lots, street, and roadways.

Also known as:

- *Catch basin planter box*
- *Bioretention vault*
- *Tree box filter*

Proprietary biotreatment
Source: http://www.americastusa.com /index.php/filterra/

Feasibility Screening Considerations

- Proprietary biotreatment devices that are unlined may cause incidental infiltration. Therefore, an evaluation of site conditions should be conducted to evaluate whether the BMP should include an impermeable liner to avoid infiltration into the subsurface.

Opportunity Criteria

- Drainage areas of 0.25 to 1.0 acres.
- Land use may include commercial, residential, mixed use, institutional, and subdivisions. Proprietary biotreatment facilities may also be applied in parking lot islands, traffic circles, road shoulders, and road medians.
- Must not adversely affect the level of flood protection provided by the drainage system.

OC-Specific Design Criteria and Considerations

☐ Frequent maintenance and the use of screens and grates to keep trash out may decrease the likelihood of clogging and prevent obstruction and bypass of incoming flows.

☐ Consult proprietors for specific criteria concerning the design and performance.

☐ Proprietary biotreatment may include specific media to address pollutants of concern. However, for proprietary device to be considered a biotreatment device the media must be capable of supporting rigorous growth of vegetation.

☐ Proprietary systems must be acceptable to the reviewing agency. Reviewing agencies shall have the discretion to request performance information. Reviewing agencies shall have the discretion to deny the use of a proprietary BMP on the grounds of performance, maintenance considerations, or other relevant factors.

☐ In right of way areas, plant selection should not impair traffic lines of site. Local jurisdictions may also limit plant selection in keeping with landscaping themes.

Computing Sizing Criteria for Proprietary Biotreatment Device

- Proprietary biotreatment devices can be volume based or flow-based BMPs.
- Volume-based proprietary devices should be sized using the Simple Design Capture Volume Sizing Method described in **Appendix III.3.1** or the Capture Efficiency Method for Volume-Based, Constant Drawdown BMPs described in **Appendix III.3.2**.
- The required design flowrate for flow-based proprietary devices should be computed using the Capture Efficiency Method for Flow-based BMPs described in **Appendix III.3.3)**.

In South Orange County, the provided ponding plus pore volume must be checked to demonstrate that it is greater than 0.75 of the remaining DCV that this BMP is designed to address. Many propretary biotreatment BMPs will not be able to meet the definition of "biofiltration" that applies in South Orange County. See Section III.7 and Worksheet SOC-1.

Additional References for Design Guidance

- Los Angeles Unified School District (LAUSD) Stormwater Technical Manual, Chapter 4: **http://www.laschools.org/employee/design/fs-studies-and-reports/download/white_paper_report_material/Storm_Water_Technical_Manual_2009-opt-red.pdf?version_id=76975850**
- Los Angeles County Stormwater BMP Design and Maintenance Manual, Chapter 9: **http://dpw.lacounty.gov/DES/design_manuals/StormwaterBMPDesignandMaintenance.pdf**
- Santa Barbara BMP Guidance Manual, Chapter 6: **http://www.santabarbaraca.gov/NR/rdonlyres/91D1FA75-C185-491E-A882-49EE17789DF8/0/Manual_071008_Final.pdf**

MWS-LINEAR2.0 STORMWATER FILTRATION SYSTEM

NATURE AND TECHNOLOGY WORKING TOGETHER IN PERFECT HARMONY.

The need for a new stormwater treatment system is evident. Federal and state requirements on cities and industry to reduce stormwater runoff increase every year as our population explodes. The EPA is now reporting that stormwater runoff represents the nation's number one water quality problem, and is the reason why nearly half of our rivers and lakes are not even clean enough to support fishing or swimming. ***Nearly half.***

MODULAR WETLANDS

To combat this catastrophe, we turned to the expert in this field: **Nature.** By developing technology that imitates the processes found in nature, we've created the most advanced stormwater filtration system available. Years ahead of current EPA requirements, our clients understand that when they invest in our new technology, they are investing in the future. For all of us.

GRATE TYPE

CURB TYPE

MWS-LINEAR TESTED REMOVAL EFFICIENCIES

TSS	Nitrate	Copper	Zinc	Oils & Grease	Bacteria	Turbidity
82% - 98%	74%	>53% - 93%	79% - 81%	84% - 99%	60% - 89%	>90%

Washington State DOE Approved

SIZING

Model #	Dimensions (ft)	WetlandMedia Surface Area (sq ft)	Treatment Flow Rate (cfs)
MWS-L-3-6	3 x 6	34	0.076
MWS-L-4-8	4 x 8	50	0.116
MWS-L-4-13	4 x 13	63	0.144
MWS-L-4-15	4 x 15	76	0.175
MWS-L-4-17	4 x 17	90	0.206
MWS-L-4-19	4 x 19	103	0.236
MWS-L-4-21	4 x 21	117	0.267

VOLUME SIZING

The Modular Wetland System is the only biofilter that can be installed downstream of detention systems.

T 760.433.7640 E info@modularwetlands.com www.modularwetlands.com

SYSTEM OPERATIONS

Pre-Filter Cartridge

35 sq ft surface area per cartridge ensures higher effectiveness and lower maintenance requirements.

This pre-filter eliminates maintenance in the Wetland Chamber.

TOP VIEW

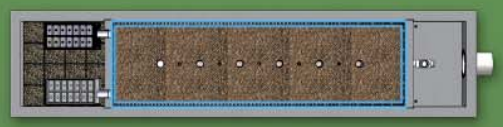

Perimeter Wetland Chamber

Pre-filtered runoff entering the wetland chamber flows into a peripheral void area, maximizing the media surface area.

Over 2x to 3x more surface area than traditional downward flow bioretention systems.

INTERNAL HIGH FLOW BYPASS CONFIGURATION AVAILABLE

FEATURES

1. **PRE-TREATMENT CHAMBER**
   Captures incoming runoff and contains the first three stages of treatment.
2. **GRATE TYPE CATCH BASIN INLET**
   A standard 41" x 24" grate type traffic rated catch basin opening directs stormwater into the system.
3. **CATCH BASIN INSERT FILTER**
   Provides the first stage of treatment by capturing trash & litter, gross solids, and sediment.
4. **SETTLING CHAMBER**
   Provides the second stage of treatment by separating out larger suspended solids.
5. **PRE-FILTER CARTRIDGE**
   Provides the third stage of treatment by physically and chemically capturing fine TSS, metals, nutrients, and bacteria.
6. **WETLAND CHAMBER**
   Provides the final stage of treatment through a combination of physical, chemical and biological processes.
7. **DISCHARGE CHAMBER**
   Contains flow control, high flow bypass and optional drain down filter.
8. **MULTI-LEVEL FLOW CONTROL**
   Orifice plates and/or valves are used to control the flow through the treatment stages.

MODULAR WETLANDS

RAINFOREST ALLIANCE CERTIFIED

T 760.433.7640 E info@modularwetlands.com www.modularwetlands.com

© 2012, Modular Wetlands Systems, Inc. All rights reserved. All names, tradenames and system renderings are property of Modular Wetlands Systems, Inc.

Attachment C

Hydromodification Analysis

SOHM

PROJECT REPORT

General Model Information

Project Name:	sunp1
Site Name:	
Site Address:	
City:	
Report Date:	4/8/2015
Gage:	Laguna Beach
Data Start:	10/01/1949
Data End:	09/30/2006
Timestep:	15 Minute
Precip Scale:	1.00
Version:	2013/04/29

POC Thresholds

Low Flow Threshold for POC1:	10 Percent of the 2 Year
High Flow Threshold for POC1:	10 Year

Landuse Basin Data

Predeveloped Land Use

Basin 1

Bypass:	No
GroundWater:	No
Pervious Land Use	Acres
D,Open Brush,VSteep	16.92
Pervious Total	16.92
Impervious Land Use	Acres
Impervious Total	0
Basin Total	16.92

Element Flows To:

Surface	Interflow	Groundwater

Mitigated Land Use

Basin 1

Bypass:	No
GroundWater:	No
Pervious Land Use	Acres
D,Open Brush,Steep	7.54
D,Open Brush,Flat	1.8
Pervious Total	9.34
Impervious Land Use	Acres
Impervious,Mod(5-10)	7.59
Impervious Total	7.59
Basin Total	16.93

Element Flows To:

Surface	Interflow	Groundwater
Vault 1	Vault 1	

Routing Elements
Predeveloped Routing

Mitigated Routing

Vault 1

Width:	245 ft.
Length:	30 ft.
Depth:	11 ft.
Discharge Structure	
Riser Height:	3 ft.
Riser Diameter:	42 in.
Notch Type:	Rectangular
Notch Width:	1.440 ft.
Notch Height:	1.927 ft.
Orifice 1 Diameter:	5 in. Elevation:0 ft.
Element Flows To:	
Outlet 1	Outlet 2

Vault Hydraulic Table

Stage(ft)	Area(ac)	Volume(ac-ft)	Discharge(cfs)	Infilt(cfs)
0.0000	0.168	0.000	0.000	0.000
0.1222	0.168	0.020	0.229	0.000
0.2444	0.168	0.041	0.324	0.000
0.3667	0.168	0.061	0.397	0.000
0.4889	0.168	0.082	0.459	0.000
0.6111	0.168	0.103	0.513	0.000
0.7333	0.168	0.123	0.562	0.000
0.8556	0.168	0.144	0.607	0.000
0.9778	0.168	0.165	0.649	0.000
1.1000	0.168	0.185	0.710	0.000
1.2222	0.168	0.206	1.002	0.000
1.3444	0.168	0.226	1.439	0.000
1.4667	0.168	0.247	1.979	0.000
1.5889	0.168	0.268	2.604	0.000
1.7111	0.168	0.288	3.303	0.000
1.8333	0.168	0.309	4.068	0.000
1.9556	0.168	0.330	4.894	0.000
2.0778	0.168	0.350	5.776	0.000
2.2000	0.168	0.371	6.711	0.000
2.3222	0.168	0.391	7.696	0.000
2.4444	0.168	0.412	8.728	0.000
2.5667	0.168	0.433	9.806	0.000
2.6889	0.168	0.453	10.92	0.000
2.8111	0.168	0.474	12.08	0.000
2.9333	0.168	0.494	13.29	0.000
3.0556	0.168	0.515	14.42	0.000
3.1778	0.168	0.536	16.55	0.000
3.3000	0.168	0.556	19.62	0.000
3.4222	0.168	0.577	23.39	0.000
3.5444	0.168	0.598	27.75	0.000
3.6667	0.168	0.618	32.63	0.000
3.7889	0.168	0.639	37.99	0.000
3.9111	0.168	0.659	43.77	0.000
4.0333	0.168	0.680	49.95	0.000
4.1556	0.168	0.701	56.50	0.000
4.2778	0.168	0.721	63.42	0.000
4.4000	0.168	0.742	70.66	0.000

4.5222	0.168	0.763	78.24	0.000
4.6444	0.168	0.783	86.12	0.000
4.7667	0.168	0.804	94.30	0.000
4.8889	0.168	0.824	102.7	0.000
5.0111	0.168	0.845	111.5	0.000
5.1333	0.168	0.866	120.5	0.000
5.2556	0.168	0.886	129.8	0.000
5.3778	0.168	0.907	139.3	0.000
5.5000	0.168	0.928	149.1	0.000
5.6222	0.168	0.948	159.1	0.000
5.7444	0.168	0.969	169.3	0.000
5.8667	0.168	0.989	179.8	0.000
5.9889	0.168	1.010	190.5	0.000
6.1111	0.168	1.031	201.5	0.000
6.2333	0.168	1.051	212.6	0.000
6.3556	0.168	1.072	224.0	0.000
6.4778	0.168	1.093	235.5	0.000
6.6000	0.168	1.113	247.3	0.000
6.7222	0.168	1.134	259.3	0.000
6.8444	0.168	1.154	271.4	0.000
6.9667	0.168	1.175	283.8	0.000
7.0889	0.168	1.196	296.4	0.000
7.2111	0.168	1.216	309.1	0.000
7.3333	0.168	1.237	322.0	0.000
7.4556	0.168	1.258	335.2	0.000
7.5778	0.168	1.278	348.5	0.000
7.7000	0.168	1.299	361.9	0.000
7.8222	0.168	1.319	375.6	0.000
7.9444	0.168	1.340	389.4	0.000
8.0667	0.168	1.361	403.4	0.000
8.1889	0.168	1.381	417.6	0.000
8.3111	0.168	1.402	431.9	0.000
8.4333	0.168	1.423	446.4	0.000
8.5556	0.168	1.443	461.1	0.000
8.6778	0.168	1.464	475.9	0.000
8.8000	0.168	1.484	490.9	0.000
8.9222	0.168	1.505	506.0	0.000
9.0444	0.168	1.526	521.3	0.000
9.1667	0.168	1.546	536.8	0.000
9.2889	0.168	1.567	552.4	0.000
9.4111	0.168	1.588	568.1	0.000
9.5333	0.168	1.608	584.0	0.000
9.6556	0.168	1.629	600.1	0.000
9.7778	0.168	1.649	616.3	0.000
9.9000	0.168	1.670	632.7	0.000
10.022	0.168	1.691	649.2	0.000
10.144	0.168	1.711	665.8	0.000
10.267	0.168	1.732	682.6	0.000
10.389	0.168	1.752	699.5	0.000
10.511	0.168	1.773	716.6	0.000
10.633	0.168	1.794	733.8	0.000
10.756	0.168	1.814	751.1	0.000
10.878	0.168	1.835	768.6	0.000
11.000	0.168	1.856	786.2	0.000
11.122	0.168	1.876	804.0	0.000
11.244	0.000	0.000	821.9	0.000

Analysis Results
POC 1

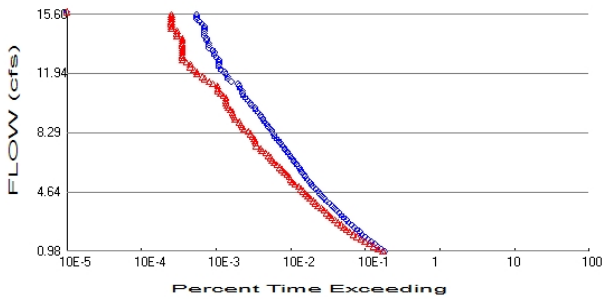

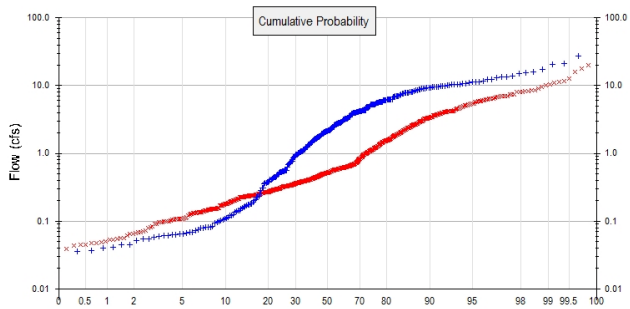

+ Predeveloped x Mitigated

Predeveloped Landuse Totals for POC #1
Total Pervious Area: 16.92
Total Impervious Area: 0

Mitigated Landuse Totals for POC #1
Total Pervious Area: 9.34
Total Impervious Area: 7.59

Flow Frequency Method: Cunnane

Flow Frequency Return Periods for Predeveloped. POC #1

Return Period	**Flow(cfs)**
2 year	9.837104
5 year	12.36614
10 year	15.596262
25 year	20.855622

Flow Frequency Return Periods for Mitigated. POC #1

Return Period	**Flow(cfs)**
2 year	6.457842
5 year	8.688433
10 year	11.234195
25 year	16.236644

Duration Flows

The Facility PASSED

Flow(cfs)	Predev	Mit	Percentage	Pass/Fail
0.9837	3616	3438	95	Pass
1.1313	3266	2962	90	Pass
1.2789	2940	2594	88	Pass
1.4265	2638	2262	85	Pass
1.5741	2394	1977	82	Pass
1.7217	2173	1745	80	Pass
1.8693	1978	1547	78	Pass
2.0169	1820	1389	76	Pass
2.1645	1683	1232	73	Pass
2.3121	1553	1108	71	Pass
2.4597	1421	1028	72	Pass
2.6073	1305	942	72	Pass
2.7549	1205	857	71	Pass
2.9025	1107	780	70	Pass
3.0501	1030	709	68	Pass
3.1977	958	657	68	Pass
3.3453	895	610	68	Pass
3.4929	826	556	67	Pass
3.6405	757	511	67	Pass
3.7881	711	463	65	Pass
3.9357	664	429	64	Pass
4.0833	602	397	65	Pass
4.2309	562	365	64	Pass
4.3785	520	338	65	Pass
4.5261	492	318	64	Pass
4.6737	466	292	62	Pass
4.8214	430	273	63	Pass
4.9690	398	254	63	Pass
5.1166	375	226	60	Pass
5.2642	355	209	58	Pass
5.4118	335	198	59	Pass
5.5594	314	191	60	Pass
5.7070	298	178	59	Pass
5.8546	282	165	58	Pass
6.0022	273	153	56	Pass
6.1498	261	143	54	Pass
6.2974	241	130	53	Pass
6.4450	227	119	52	Pass
6.5926	216	111	51	Pass
6.7402	204	108	52	Pass
6.8878	196	100	51	Pass
7.0354	183	92	50	Pass
7.1830	172	82	47	Pass
7.3306	164	79	48	Pass
7.4782	156	69	44	Pass
7.6258	146	68	46	Pass
7.7734	138	66	47	Pass
7.9210	129	65	50	Pass
8.0686	121	61	50	Pass
8.2162	118	58	49	Pass
8.3638	112	54	48	Pass
8.5114	106	47	44	Pass
8.6590	100	45	45	Pass

8.8066	96	43	44	Pass
8.9542	90	41	45	Pass
9.1018	85	36	42	Pass
9.2494	81	35	43	Pass
9.3970	79	34	43	Pass
9.5446	73	33	45	Pass
9.6922	67	31	46	Pass
9.8398	66	29	43	Pass
9.9874	60	28	46	Pass
10.1350	57	27	47	Pass
10.2826	53	27	50	Pass
10.4302	49	27	55	Pass
10.5778	46	25	54	Pass
10.7254	45	23	51	Pass
10.8730	45	21	46	Pass
11.0206	42	21	50	Pass
11.1682	41	21	51	Pass
11.3158	39	18	46	Pass
11.4634	32	16	50	Pass
11.6110	29	14	48	Pass
11.7586	29	13	44	Pass
11.9062	27	11	40	Pass
12.0538	26	11	42	Pass
12.2014	23	10	43	Pass
12.3490	22	9	40	Pass
12.4966	22	9	40	Pass
12.6442	22	8	36	Pass
12.7918	22	7	31	Pass
12.9394	20	7	35	Pass
13.0870	19	7	36	Pass
13.2346	19	7	36	Pass
13.3822	18	7	38	Pass
13.5298	16	7	43	Pass
13.6774	16	7	43	Pass
13.8250	16	7	43	Pass
13.9726	15	7	46	Pass
14.1202	15	7	46	Pass
14.2678	14	6	42	Pass
14.4154	14	6	42	Pass
14.5631	14	6	42	Pass
14.7107	14	5	35	Pass
14.8583	14	5	35	Pass
15.0059	13	5	38	Pass
15.1535	12	5	41	Pass
15.3011	11	5	45	Pass
15.4487	11	5	45	Pass
15.5963	11	5	45	Pass

Water Quality

Drawdown Time Results

Model Default Modifications

Total of 0 changes have been made.

PERLND Changes

No PERLND changes have been made.

IMPLND Changes

No IMPLND changes have been made.

Appendix

Predeveloped Schematic

Mitigated Schematic

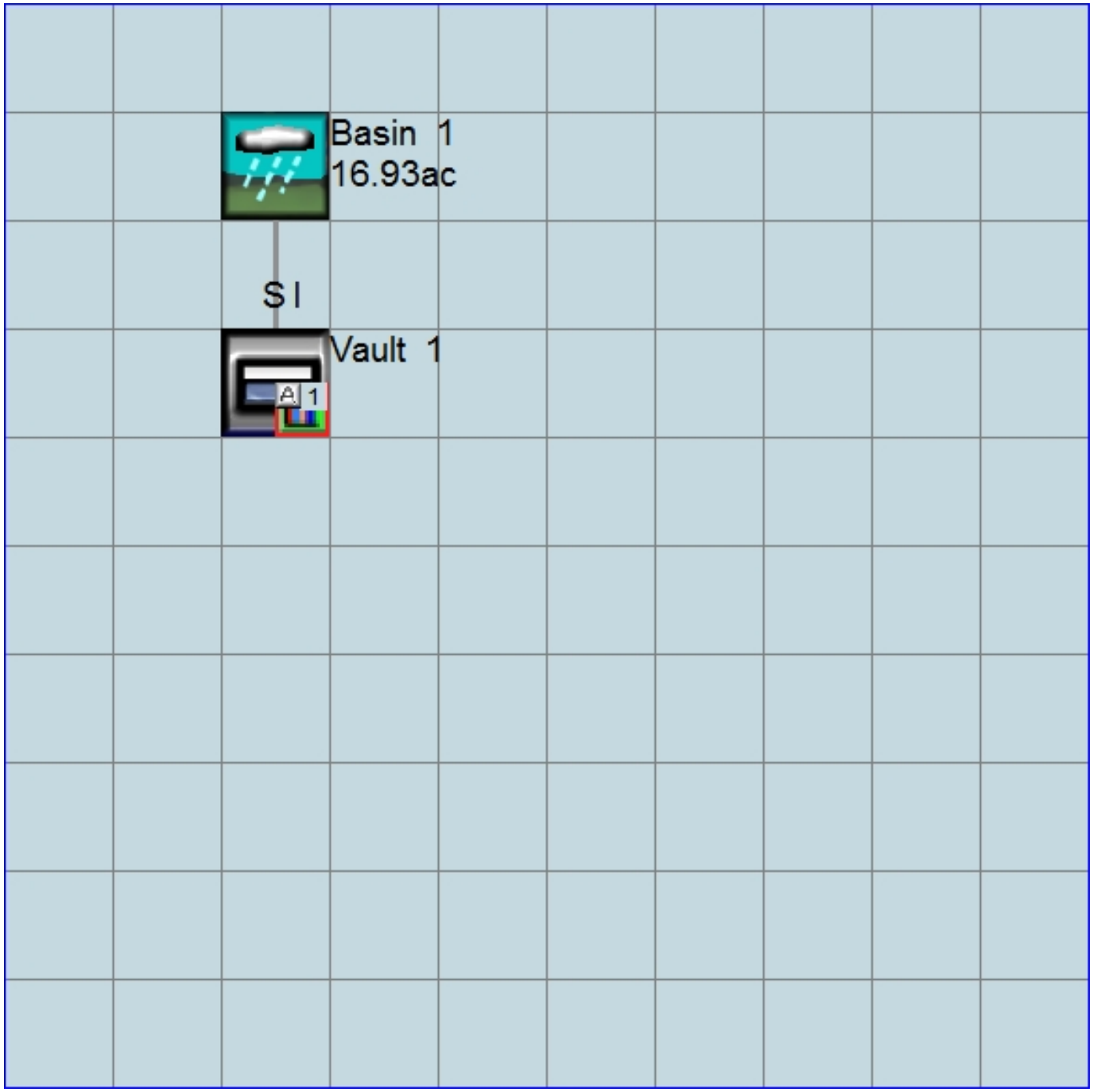

Predeveloped UCI File

Mitigated UCI File

```
RUN

GLOBAL
  WWHM4 model simulation
  START       1949 10 01        END    2006 09 30
  RUN INTERP OUTPUT LEVEL    3    0
  RESUME     0 RUN     1                    UNIT SYSTEM     1
END GLOBAL

FILES
<File>  <Un#>   <-----------File Name------------------------------>***
<-ID->                                                               ***
WDM        26   sunp1.wdm
MESSU      25   Mitsunp1.MES
           27   Mitsunp1.L61
           28   Mitsunp1.L62
           30   POCsunp11.dat
END FILES

OPN SEQUENCE
    INGRP              INDELT 00:15
      PERLND      43
      PERLND      41
      IMPLND       2
      RCHRES       1
      COPY         1
      COPY       501
      DISPLY       1
    END INGRP
END OPN SEQUENCE
DISPLY
  DISPLY-INFO1
    # -  #<----------Title----------->***TRAN PIVL DIG1 FIL1  PYR DIG2 FIL2 YRND
    1        Vault  1                   MAX                     1    2   30    9
  END DISPLY-INFO1
END DISPLY
COPY
  TIMESERIES
    # -  #  NPT  NMN ***
    1         1    1
  501         1    1
  END TIMESERIES
END COPY
GENER
  OPCODE
    #    # OPCD ***
  END OPCODE
  PARM
    #    #         K ***
  END PARM
END GENER
PERLND
  GEN-INFO
    <PLS ><-------Name------->NBLKS   Unit-systems   Printer ***
    # -  #                          User  t-series Engl Metr ***
                                           in  out            ***
   43     D,Open Brush,Steep      1    1    1    1   27    0
   41     D,Open Brush,Flat       1    1    1    1   27    0
  END GEN-INFO
  *** Section PWATER***

  ACTIVITY
    <PLS > ************* Active Sections ****************************
    # -  # ATMP SNOW PWAT  SED  PST  PWG PQAL MSTL PEST NITR PHOS TRAC ***
   43         0    0    1    0    0    0    0    0    0    0    0    0
   41         0    0    1    0    0    0    0    0    0    0    0    0
  END ACTIVITY
```

```
  PRINT-INFO
    <PLS > ***************** Print-flags ***************************** PIVL  PYR
    # -  # ATMP SNOW PWAT  SED  PST  PWG PQAL MSTL PEST NITR PHOS TRAC  *********
   43         0    0    4    0    0    0    0    0    0    0    0    0    1    9
   41         0    0    4    0    0    0    0    0    0    0    0    0    1    9
  END PRINT-INFO

  PWAT-PARM1
    <PLS >  PWATER variable monthly parameter value flags  ***
    # -  # CSNO RTOP UZFG  VCS  VUZ  VNN VIFW VIRC  VLE INFC  HWT ***
   43         0    0    0    1    0    0    0    0    1    0    0
   41         0    0    0    1    0    0    0    0    1    0    0
  END PWAT-PARM1

  PWAT-PARM2
    <PLS >      PWATER input info: Part 2         ***
    # -  # ***FOREST      LZSN    INFILT      LSUR     SLSUR     KVARY     AGWRC
   43              0         4     0.025       300      0.15       0.8     0.955
   41              0       4.6      0.04       400      0.05       0.8     0.955
  END PWAT-PARM2

  PWAT-PARM3
    <PLS >      PWATER input info: Part 3         ***
    # -  # ***PETMAX    PETMIN    INFEXP    INFILD    DEEPFR    BASETP    AGWETP
   43             40        35         4         2         0      0.03         0
   41             40        35         4         2         0      0.03         0
  END PWAT-PARM3
  PWAT-PARM4
    <PLS >     PWATER input info: Part 4                              ***
    # -  #     CEPSC      UZSN      NSUR     INTFW       IRC     LZETP ***
   43              0      0.45      0.25       0.6       0.4         0
   41              0       0.8      0.25         1       0.7         0
  END PWAT-PARM4
  MON-LZETPARM
    <PLS >      PWATER input info: Part 3         ***
    # -  #  JAN  FEB  MAR  APR  MAY  JUN  JUL  AUG  SEP  OCT  NOV  DEC  ***
   43       0.4  0.4  0.4  0.5 0.55 0.55 0.55 0.55 0.55 0.55 0.45  0.4
   41       0.4  0.4  0.4  0.5 0.55 0.55 0.55 0.55 0.55 0.55 0.45  0.4
  END MON-LZETPARM
  MON-INTERCEP
    <PLS >      PWATER input info: Part 3         ***
    # -  #  JAN  FEB  MAR  APR  MAY  JUN  JUL  AUG  SEP  OCT  NOV  DEC  ***
   43      0.12 0.12 0.12 0.12 0.12 0.12 0.12 0.12 0.12 0.12 0.12 0.12
   41      0.12 0.12 0.12 0.12 0.12 0.12 0.12 0.12 0.12 0.12 0.12 0.12
  END MON-INTERCEP

  PWAT-STATE1
    <PLS > *** Initial conditions at start of simulation
               ran from 1990 to end of 1992 (pat 1-11-95) RUN 21 ***
    # -  # ***  CEPS      SURS       UZS      IFWS       LZS      AGWS      GWVS
   43              0         0     0.045         0       0.8       0.3      0.01
   41              0         0      0.08         0      0.92       0.3      0.01
  END PWAT-STATE1

END PERLND

IMPLND
  GEN-INFO
    <PLS ><-------Name------->   Unit-systems   Printer ***
    # -  #                     User  t-series Engl Metr ***
                                     in  out           ***
    2     Impervious,Mod(5-10)    1    1    1   27    0
  END GEN-INFO
  *** Section IWATER***

  ACTIVITY
    <PLS > ************* Active Sections ****************************
    # -  # ATMP SNOW IWAT  SLD  IWG IQAL   ***
    2         0    0    1    0    0    0
  END ACTIVITY
```

```
  PRINT-INFO
    <ILS > ******** Print-flags ******** PIVL  PYR
    # -  # ATMP SNOW IWAT  SLD  IWG IQAL    *********
    2         0    0    4    0    0    0    1    9
  END PRINT-INFO

  IWAT-PARM1
    <PLS >  IWATER variable monthly parameter value flags  ***
    # -  # CSNO RTOP  VRS  VNN RTLI     ***
    2         0    0    0    0    0
  END IWAT-PARM1

  IWAT-PARM2
    <PLS >      IWATER input info: Part 2         ***
    # -  # ***  LSUR     SLSUR      NSUR     RETSC
    2           100       0.1       0.1      0.09
  END IWAT-PARM2

  IWAT-PARM3
    <PLS >      IWATER input info: Part 3         ***
    # -  # ***PETMAX    PETMIN
    2             0         0
  END IWAT-PARM3

  IWAT-STATE1
    <PLS > *** Initial conditions at start of simulation
    # -  # ***  RETS      SURS
    2             0         0
  END IWAT-STATE1

END IMPLND

SCHEMATIC
<-Source->                 <--Area-->     <-Target->   MBLK   ***
<Name>   #                 <-factor->     <Name>   #   Tbl#   ***
Basin  1***
PERLND  43                       7.54     RCHRES   1      2
PERLND  43                       7.54     RCHRES   1      3
PERLND  41                        1.8     RCHRES   1      2
PERLND  41                        1.8     RCHRES   1      3
IMPLND   2                       7.59     RCHRES   1      5

******Routing******
PERLND  43                       7.54     COPY     1     12
PERLND  41                        1.8     COPY     1     12
IMPLND   2                       7.59     COPY     1     15
PERLND  43                       7.54     COPY     1     13
PERLND  41                        1.8     COPY     1     13
RCHRES   1                          1     COPY   501     16
END SCHEMATIC

NETWORK
<-Volume-> <-Grp> <-Member-><--Mult-->Tran <-Target vols> <-Grp> <-Member->  ***
<Name>   #        <Name> # #<-factor->strg <Name>   #   #        <Name> # #  ***
COPY   501 OUTPUT MEAN   1 1   48.4        DISPLY   1     INPUT  TIMSER 1



<-Volume-> <-Grp> <-Member-><--Mult-->Tran <-Target vols> <-Grp> <-Member->  ***
<Name>   #        <Name> # #<-factor->strg <Name>   #   #        <Name> # #  ***
END NETWORK

RCHRES
  GEN-INFO
    RCHRES       Name        Nexits   Unit Systems   Printer                 ***
    # -  #<------------------><---> User T-series  Engl Metr LKFG            ***
                                          in  out                             ***
    1     Vault  1                 1    1    1    1   28    0    1
  END GEN-INFO
```

```
  *** Section RCHRES***

  ACTIVITY
    <PLS > ************* Active Sections ****************************
    # -  # HYFG ADFG CNFG HTFG SDFG GQFG OXFG NUFG PKFG PHFG ***
    1         1    0    0    0    0    0    0    0    0    0
  END ACTIVITY

  PRINT-INFO
    <PLS > ***************** Print-flags ******************* PIVL  PYR
    # -  # HYDR ADCA CONS HEAT  SED  GQL OXRX NUTR PLNK PHCB PIVL  PYR  *********
    1         4    0    0    0    0    0    0    0    0    0    1    9
  END PRINT-INFO

  HYDR-PARM1
    RCHRES  Flags for each HYDR Section                                        ***
    # -  #  VC A1 A2 A3  ODFVFG for each *** ODGTFG for each     FUNCT  for each
            FG FG FG FG  possible  exit  *** possible  exit      possible  exit
             *  *  *  *    *  *  *  *  *       *  *  *  *  *         ***
    1        0  1  0  0    4  0  0  0  0       0  0  0  0  0       2  2  2  2  2
  END HYDR-PARM1

  HYDR-PARM2
    # -  #    FTABNO       LEN     DELTH     STCOR        KS      DB50       ***
  <------><--------><--------><--------><--------><--------><-------->       ***
    1              1      0.01       0.0       0.0       0.5       0.0
  END HYDR-PARM2
  HYDR-INIT
    RCHRES  Initial conditions for each HYDR section                           ***
    # -  # ***   VOL     Initial  value  of COLIND     Initial  value  of OUTDGT
          *** ac-ft     for each possible exit        for each possible exit
  <------><-------->     <---><---><---><---><---> *** <---><---><---><---><--->
    1         0            4.0  0.0  0.0  0.0  0.0       0.0  0.0  0.0  0.0  0.0
  END HYDR-INIT
END RCHRES

SPEC-ACTIONS
END SPEC-ACTIONS
FTABLES
  FTABLE      1
   92    4
     Depth      Area    Volume  Outflow1 Velocity  Travel Time***
      (ft)   (acres) (acre-ft)   (cfs)   (ft/sec)    (Minutes)***
  0.000000  0.168733  0.000000  0.000000
  0.122222  0.168733  0.020623  0.229548
  0.244444  0.168733  0.041246  0.324630
  0.366667  0.168733  0.061869  0.397589
  0.488889  0.168733  0.082492  0.459097
  0.611111  0.168733  0.103114  0.513286
  0.733333  0.168733  0.123737  0.562276
  0.855556  0.168733  0.144360  0.607328
  0.977778  0.168733  0.164983  0.649261
  1.100000  0.168733  0.185606  0.709978
  1.222222  0.168733  0.206229  1.002445
  1.344444  0.168733  0.226852  1.439665
  1.466667  0.168733  0.247475  1.979805
  1.588889  0.168733  0.268098  2.604714
  1.711111  0.168733  0.288721  3.303457
  1.833333  0.168733  0.309343  4.068510
  1.955556  0.168733  0.329966  4.894284
  2.077778  0.168733  0.350589  5.776415
  2.200000  0.168733  0.371212  6.711371
  2.322222  0.168733  0.391835  7.696217
  2.444444  0.168733  0.412458  8.728465
  2.566667  0.168733  0.433081  9.805969
  2.688889  0.168733  0.453704  10.92685
  2.811111  0.168733  0.474327  12.08945
  2.933333  0.168733  0.494949  13.29230
  3.055556  0.168733  0.515572  14.42171
  3.177778  0.168733  0.536195  16.55313
```

```
  3.300000  0.168733  0.556818  19.62137
  3.422222  0.168733  0.577441  23.39405
  3.544444  0.168733  0.598064  27.75722
  3.666667  0.168733  0.618687  32.63925
  3.788889  0.168733  0.639310  37.98964
  3.911111  0.168733  0.659933  43.77032
  4.033333  0.168733  0.680556  49.95122
  4.155556  0.168733  0.701178  56.50784
  4.277778  0.168733  0.721801  63.41968
  4.400000  0.168733  0.742424  70.66927
  4.522222  0.168733  0.763047  78.24152
  4.644444  0.168733  0.783670  86.12317
  4.766667  0.168733  0.804293  94.30248
  4.888889  0.168733  0.824916  102.7690
  5.011111  0.168733  0.845539  111.5132
  5.133333  0.168733  0.866162  120.5265
  5.255556  0.168733  0.886785  129.8011
  5.377778  0.168733  0.907407  139.3299
  5.500000  0.168733  0.928030  149.1062
  5.622222  0.168733  0.948653  159.1239
  5.744444  0.168733  0.969276  169.3772
  5.866667  0.168733  0.989899  179.8609
  5.988889  0.168733  1.010522  190.5700
  6.111111  0.168733  1.031145  201.4999
  6.233333  0.168733  1.051768  212.6461
  6.355556  0.168733  1.072391  224.0046
  6.477778  0.168733  1.093013  235.5715
  6.600000  0.168733  1.113636  247.3430
  6.722222  0.168733  1.134259  259.3156
  6.844444  0.168733  1.154882  271.4860
  6.966667  0.168733  1.175505  283.8511
  7.088889  0.168733  1.196128  296.4079
  7.211111  0.168733  1.216751  309.1533
  7.333333  0.168733  1.237374  322.0848
  7.455556  0.168733  1.257997  335.1995
  7.577778  0.168733  1.278620  348.4951
  7.700000  0.168733  1.299242  361.9691
  7.822222  0.168733  1.319865  375.6192
  7.944444  0.168733  1.340488  389.4430
  8.066667  0.168733  1.361111  403.4385
  8.188889  0.168733  1.381734  417.6035
  8.311111  0.168733  1.402357  431.9361
  8.433333  0.168733  1.422980  446.4343
  8.555556  0.168733  1.443603  461.0962
  8.677778  0.168733  1.464226  475.9201
  8.800000  0.168733  1.484848  490.9041
  8.922222  0.168733  1.505471  506.0467
  9.044444  0.168733  1.526094  521.3461
  9.166667  0.168733  1.546717  536.8007
  9.288889  0.168733  1.567340  552.4090
  9.411111  0.168733  1.587963  568.1695
  9.533333  0.168733  1.608586  584.0808
  9.655556  0.168733  1.629209  600.1414
  9.777778  0.168733  1.649832  616.3500
  9.900000  0.168733  1.670455  632.7051
  10.02222  0.168733  1.691077  649.2056
  10.14444  0.168733  1.711700  665.8501
  10.26667  0.168733  1.732323  682.6374
  10.38889  0.168733  1.752946  699.5664
  10.51111  0.168733  1.773569  716.6357
  10.63333  0.168733  1.794192  733.8443
  10.75556  0.168733  1.814815  751.1911
  10.87778  0.168733  1.835438  768.6749
  11.00000  0.168733  1.856061  786.2948
  11.12222  0.168733  1.876684  804.0495
  END FTABLE  1
END FTABLES

EXT SOURCES
<-Volume-> <Member> SsysSgap<--Mult-->Tran <-Target vols> <-Grp> <-Member->  ***
```

```
<Name>   # <Name> # tem strg<-factor->strg <Name>   #   #        <Name> # #  ***
WDM      2 PREC     ENGL    1              PERLND   1 999 EXTNL  PREC
WDM      2 PREC     ENGL    1              IMPLND   1 999 EXTNL  PREC
WDM      1 EVAP     ENGL    1              PERLND   1 999 EXTNL  PETINP
WDM      1 EVAP     ENGL    1              IMPLND   1 999 EXTNL  PETINP

END EXT SOURCES

EXT TARGETS
<-Volume-> <-Grp> <-Member-><--Mult-->Tran <-Volume-> <Member> Tsys Tgap Amd ***
<Name>   #        <Name> # #<-factor->strg <Name>   # <Name>    tem strg strg***
RCHRES   1 HYDR   RO     1 1        1      WDM   1004 FLOW     ENGL      REPL
RCHRES   1 HYDR   STAGE  1 1        1      WDM   1005 STAG     ENGL      REPL
COPY     1 OUTPUT MEAN   1 1     48.4      WDM    701 FLOW     ENGL      REPL
COPY   501 OUTPUT MEAN   1 1     48.4      WDM    801 FLOW     ENGL      REPL
END EXT TARGETS

MASS-LINK
<Volume>   <-Grp> <-Member-><--Mult-->     <Target>       <-Grp> <-Member->***
<Name>            <Name> # #<-factor->     <Name>                <Name> # #***
  MASS-LINK        2
PERLND     PWATER SURO       0.083333      RCHRES         INFLOW IVOL
  END MASS-LINK    2

  MASS-LINK        3
PERLND     PWATER IFWO       0.083333      RCHRES         INFLOW IVOL
  END MASS-LINK    3

  MASS-LINK        5
IMPLND     IWATER SURO       0.083333      RCHRES         INFLOW IVOL
  END MASS-LINK    5

  MASS-LINK       12
PERLND     PWATER SURO       0.083333      COPY           INPUT  MEAN
  END MASS-LINK   12

  MASS-LINK       13
PERLND     PWATER IFWO       0.083333      COPY           INPUT  MEAN
  END MASS-LINK   13

  MASS-LINK       15
IMPLND     IWATER SURO       0.083333      COPY           INPUT  MEAN
  END MASS-LINK   15

  MASS-LINK       16
RCHRES     ROFLOW                          COPY           INPUT  MEAN
  END MASS-LINK   16


END MASS-LINK

END RUN
```

Mitigated HSPF Message File

Disclaimer

Legal Notice

This program and accompanying documentation are provided 'as-is' without warranty of any kind. The entire risk regarding the performance and results of this program is assumed by End User. Clear Creek Solutions Inc. and the governmental licensee or sublicensees disclaim all warranties, either expressed or implied, including but not limited to implied warranties of program and accompanying documentation. In no event shall Clear Creek Solutions Inc. be liable for any damages whatsoever (including without limitation to damages for loss of business profits, loss of business information, business interruption, and the like) arising out of the use of, or inability to use this program even if Clear Creek Solutions Inc. or their authorized representatives have been advised of the possibility of such damages. Software Copyright © by : Clear Creek Solutions, Inc. 2005-2013; All Rights Reserved.

Clear Creek Solutions, Inc.
6200 Capitol Blvd. Ste F
Olympia, WA. 98501
Toll Free 1(866)943-0304
Local (360)943-0304

www.clearcreeksolutions.com

VICINITY MAP

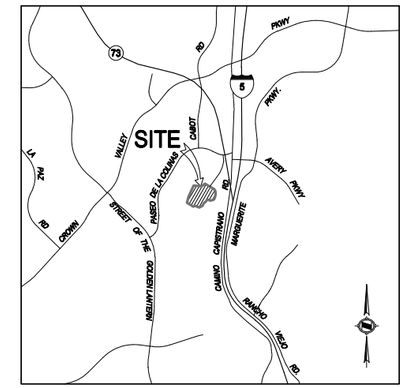

PREPARED FOR:

EULAND CAPITAL ENTERPRISES
15 Heron Street
Irvine, CA 92604
Phone: (949) 293-2246
Fax: (949) 387-0933

PREPARED BY:

HUNSAKER & ASSOCIATES
IRVINE, INC.
PLANNING • ENGINEERING • SURVEYING
Three Hughes • Irvine, CA 92618
FX: (949) 583-0759 • PH: (949) 583-1010

FEET
0 30 60 120
0 1/2 1 2
INCHES

HYDROMODIFICATION MAP
TTM 17433

WO: 2950-3X

F:\0178\Planning\OA_Project\TTM\178P-TT5241.dwg

STORMTRAP®
PATENTED
Precast Concrete Modular Stormwater Management System

TRACT 5241

LAGUNA, CA

STORMTRAP®
PRECAST CONCRETE MODULAR STORMWATER MANAGEMENT SYSTEMS
THIS STORMTRAP DESIGN MAY BE COVERED BY 1 OR MORE OF THE FOLLOWING U.S. PATENTS: NO. 6,991,402 B2; 7,160,058 B2; 7,344,335 B2
CA. PATENT NO. 2,445,609
2495 WEST BUNGALOW ROAD
MORRIS, IL 60450
P: 815-941-4663
F: 815-416-1100

HUNSAKER &
ASSOCIATES

3 HUGHES
IRVINE, CA 92618
Phone: 949-583-1010
Fax: 949-583-0759

TRACT 5241

LAGUNA, CA

DESIGN ASSUMPTIONS

COVER:	MIN: 1.16' - MAX: 10'
GROUNDWATER TABLE:	BELOW THE SYSTEMS INVERT
SOIL PRESSURE:	3000 PSF
LOADING:	AASHTO HS-20 HIGHWAY LOADING

SHEET INDEX

PAGE	DESCRIPTION	REV.
0.0	COVER SHEET	1
1.0	DOUBLETRAP INSTALLATION SPECIFICATIONS	1
2.0	DOUBLETRAP INSTALLATION SPECIFICATIONS	1
3.0	DETAIL LAYOUT	1
4.0	STANDARD - 9'-0" DOUBLETRAP UNIT TYPES	1

JOB SITE INFORMATION

DESCRIPTION

JOB NAME:	TRACT 5241
ENGINEERING COMPANY:	HUNSAKER & ASSOCIATES
CONTACT NAME:	FRANCISCO CALDERON
CONTACT PHONE:	949-583-1010
CONTACT FAX:	949-583-0759
STORM TRAP SUPPLIER:	STORMTRAP
CONTACT NAME:	CHARLIE CARTER
CONTACT PHONE:	760-212-5628
CONTACT EMAIL:	CCARTER@STORMTRAP.COM
WATER STORAGE REQ'D:	59,242.00 CUBIC FEET
WATER STORAGE PROV:	60,115.73 CUBIC FEET
UNIT HEADROOM:	9'-0" DOUBLETRAP
UNIT QUANTITY:	128 TOTAL PIECES

DATE:

09-JAN-2015

APPROVED BY:

ISSUED FOR:

PRELMINARY

REV.:	DATE:	DESC.	DWG.
1	09-JAN-2015	ISSUED FOR PRELIMINARY	JPH

SCALE:

NTS

SHEET TITLE:

COVER SHEET

SHEET NUMBER:

0.0

STORMTRAP INSTALLATION SPECIFICATION

1. STORMTRAP MODULES SHALL BE MANUFACTURED ACCORDING TO SHOP DRAWINGS APPROVED BY THE INSTALLING CONTRACTOR AND ENGINEER. THE SHOP DRAWINGS SHALL INDICATE SIZE AND LOCATION OF ROOF OPENINGS AND INLET/ OUTLET PIPE OPENINGS.

2. STORMTRAP SHALL BE INSTALLED IN ACCORDANCE WITH ASTM C891-09, STANDARD PRACTICE FOR INSTALLATION OF UNDERGROUND PRECAST CONCRETE UTILITY STRUCTURES. THE FOLLOWING ADDITIONS AND/OR EXCEPTIONS SHALL APPLY:

   A. SPECIFICATIONS ON THE ENGINEER'S DRAWINGS SHALL TAKE PRECEDENCE.

   B. STORMTRAP MODULES SHALL BE PLACED ON A LEVEL PAD OF 3/4" AGGREGATE, THAT EXTENDS 2'-0" PAST THE OUTSIDE OF THE SYSTEM, PER ASTM C891-09 STANDARD PRACTICE FOR INSTALLATION OF UNDERGROUND PRECAST CONCRETE UTILITY STRUCTURES.

   C. THE STORMTRAP MODULES SHALL BE PLACED SUCH THAT THE MAXIMUM SPACE BETWEEN ADJACENT MODULES DOES NOT EXCEED 3/4". IF THE SPACE EXCEEDS 3/4", THE MODULES SHALL BE RESET WITH APPROPRIATE ADJUSTMENT MADE TO LINE AND GRADE TO BRING THE SPACE INTO SPECIFICATION.

   D. THE HORIZONTAL JOINT BETWEEN THE TOP AND BASE UNIT LEG CONNECTION OF THE STORMTRAP MODULES SHALL BE SEALED TO THE FOUNDATION WITH PREFORMED MASTIC JOINT SEALER ACCORDING TO ASTM C891-09, 8.8 AND 8.12. SEE DETAIL "A"

   E. ALL EXTERIOR JOINTS BETWEEN ADJACENT STORMTRAP MODULES SHALL BE SEALED WITH 0'-8" PRE-FORMED, COLD-APPLIED, SELF-ADHERING ELASTOMERIC RESIN BONDED TO A WOVEN HIGHLY PUNCTURE RESISTANT POLYMER WRAP CONFORMING TO ASTM C891-09 AND SHALL BE 0'-8" INTEGRATED PRIMER SEALANT AS APPROVED BY STORMTRAP. THE ADHESIVE EXTERIOR JOINT WRAP SHALL BE INSTALLED ACCORDING TO THE FOLLOWING INSTALLATION INSTRUCTIONS:

      1. USE A BRUSH OR WET CLOTH TO THOROUGHLY CLEAN THE OUTSIDE SURFACE AT THE POINT WHERE THE JOINT WRAP IS TO BE APPLIED.

      2. A RELEASE PAPER PROTECTS THE ADHESIVE SIDE OF THE JOINT WRAP. PLACE THE ADHESIVE TAPE (BUTYL SIDE DOWN) AROUND THE STRUCTURE, REMOVING THE RELEASE PAPER AS YOU GO. PRESS THE JOINT WRAP FIRMLY AGAINST THE STORMTRAP MODULE SURFACE WHEN APPLYING.

   F. THE FILL PLACED AROUND THE STORMTRAP UNITS MUST BE DEPOSITED ON BOTH SIDES AT THE SAME TIME AND TO APPROXIMATELY THE SAME ELEVATION. AT NO TIME SHALL THE FILL BEHIND ONE SIDE WALL BE MORE THAN 2'-0" HIGHER THAN THE FILL ON THE OPPOSITE SIDE. BACKFILL SHALL BE COMPACTED TO 95% STANDARD PROCTOR DENSITY OR OTHERWISE SPECIFIED BY ENGINEER. CARE SHALL BE TAKEN TO PREVENT ANY WEDGING ACTION AGAINST THE STRUCTURE, AND ALL SLOPES BOUNDING OR WITHIN THE AREA TO BE BACKFILLED MUST BE STEPPED OR SERRATED TO PREVENT WEDGE ACTION. (REFERENCE ARTICLE 502.10 I.D.O.T. S.S.R.B.C.) CARE SHALL ALSO BE TAKEN AS NOT TO DISRUPT THE JOINT WRAP FROM THE JOINT DURING THE BACKFILL PROCESS. BACKFILL MATERIAL SHALL BE CLEAN, CRUSHED, ANGULAR No.5 (AASHTO M43) AGGREGATE.

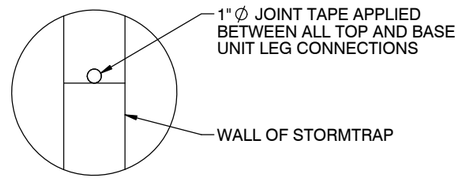

DETAIL "A"
JOINT TAPE INSTALLATION

STORMTRAP SPECIFICATION

1. TOTAL COVER: MIN. 1.16' MAX. 10' CONSULT STORMTRAP FOR ADDITIONAL COVER OPTIONS.
2. CONCRETE CHAMBER DESIGNED FOR AASHTO HS-20 HIGHWAY LOADING. MIN. SOIL PRESSURE 3000 PSF.
3. ALL DIMENSIONS AND SOIL CONDITIONS, INCLUDING BUT NOT LIMITED TO GROUNDWATER AND SOIL BEARING CAPACITY ARE TO BE VERIFIED IN THE FIELD BY OTHERS PRIOR TO STORMTRAP INSTALLATION.
4. FOR STRUCTURA CALCULATIONS THE GROUND WATER TABLE IS ASSUMED TO BE BELOW THE SYSTEMS INVERT. IF WATER TABLE IS DIFFERENT THAN ASSUMED, CONTACT STORMTRAP.
5. FOR STRUCTURAL CALCULATIONS THE SOIL DENSITY IS ASSUMED TO BE 120 PCF.
6. FOR FLOTATION CALCULATIONS THE GROUND WATER TABLE IS ASSUMED TO BE BELOW THE SYSTEMS INVERT. IF WATER TABLE IS DIFFERENT THAN ASSUMED, CONTACT STORMTRAP.
7. STORMTRAP IS NOT WATERTIGHT. CONTACT STORMTRAP FOR WATERTIGHT OPTIONS. WATERTIGHT APPLICATION TO BE PROVIDED BY OTHERS.

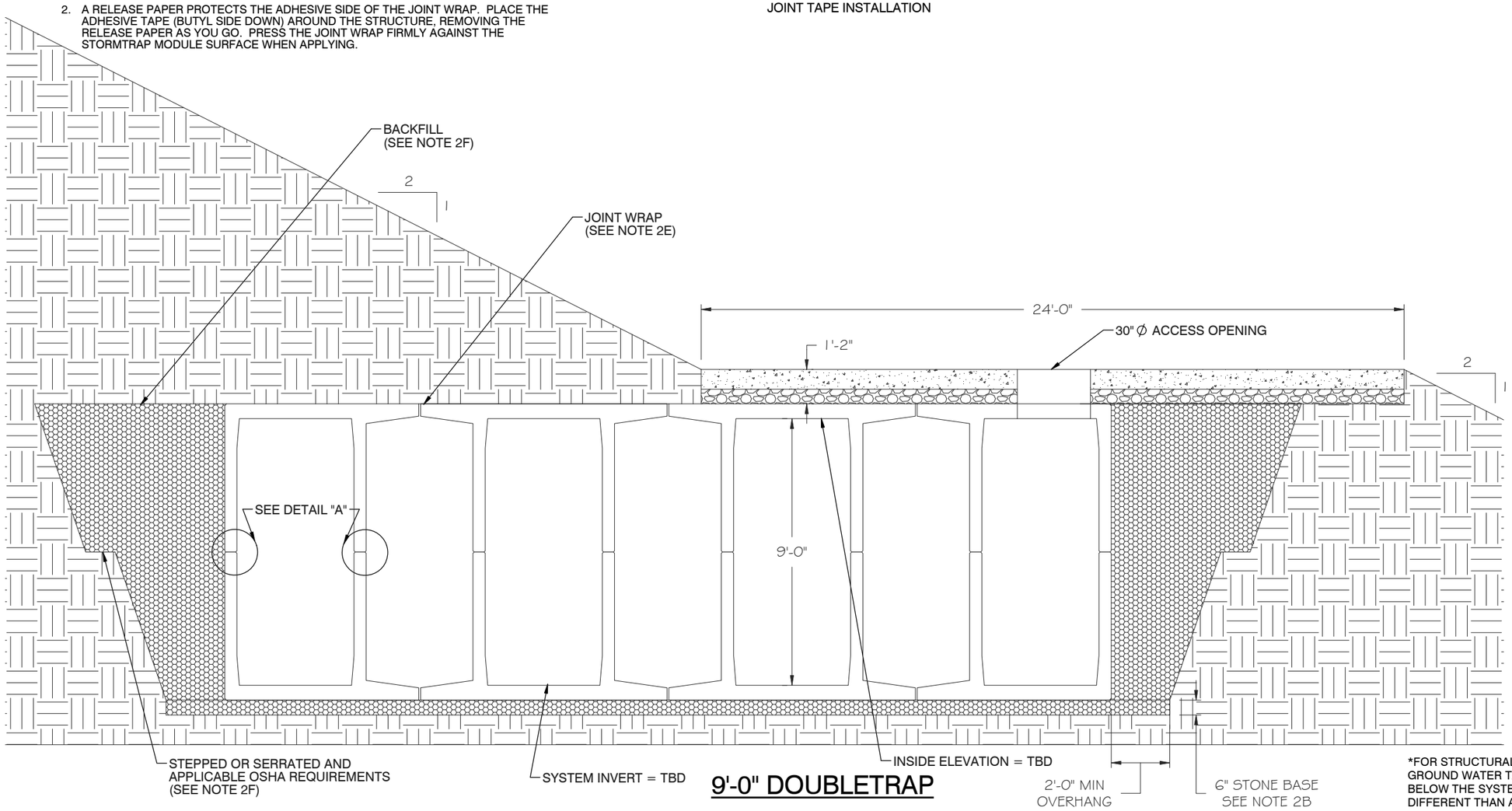

9'-0" DOUBLETRAP

*FOR STRUCTURAL & FLOTATION CALCULATIONS THE GROUND WATER TABLES ASSUMED TO BE BELOW THE SYSTEMS INVERT. IF WATER TABLE IS DIFFERENT THAN ASSUMED, CONTACT STORMTRAP.

STORMTRAP INC.
PRECAST CONCRETE MODULAR STORMWATER MANAGEMENT SYSTEMS
THIS STORMTRAP DESIGN MAY BE COVERED BY 1 OR MORE OF THE FOLLOWING U.S. PATENTS: NO. 6,991,402 B2; 7,160,058 B2; 7,344,335 B2
C.A. PATENT NO. 2,445,609
2495 WEST BUNGALOW ROAD
MORRIS, IL 60450
P: 815-941-4663
F: 815-416-1100

HUNSAKER & ASSOCIATES
3 HUGHES
IRVINE, CA 92618
Phone: 949-583-1010
Fax: 949-583-0759

TRACT 5241

LAGUNA, CA

DATE:
09-JAN-2015

APPROVED BY:

ISSUED FOR:
PRELMINARY

REV.:	DATE:	DESC.	DWG.
1	09-JAN-2015	ISSUED FOR PRELIMINARY	JPH

SCALE:
NTS

SHEET TITLE:
DOUBLETRAP INSTALLATION SPECIFICATIONS

SHEET NUMBER:
1.0

RECOMMENDED ACCESS OPENING SPECIFICATION

1. A TYPICAL ACCESS OPENING FOR THE STORMTRAP SYSTEM ARE 2'-0" IN DIAMETER. ACCESS OPENINGS LARGER THAN 2'-0" IN DIAMETER NEED TO BE APPROVED BY STORMTRAP. ALL OPENINGS MUST RETAIN AT LEAST 1'-0" OF CLEARANCE IN ALL DIRECTIONS FROM THE EDGE OF THE STORMTRAP UNITS.
2. PLASTIC COATED STEEL STEPS PRODUCED BY M.A. INDUSTRIES PART #PS3-PFC (SEE DETAIL TO THE RIGHT) ARE PROVIDED INSIDE ANY UNIT WHERE DEEMED NECESSARY. THE HIGHEST STEP IN THE UNIT IS TO BE PLACED A DISTANCE OF 1'-0" FROM THE INSIDE EDGE OF THE STORMTRAP UNITS. ALL ENSUING STEPS SHALL BE PLACED WITH A MAXIMUM DISTANCE OF 1'-4" BETWEEN THEM. STEPS MAY BE MOVED OR ALTERED TO AVOID OPENINGS OR OTHER IRREGULARITIES IN THE UNIT.
3. STORMTRAP LIFTING INSERTS MAY BE RELOCATED TO COINCIDE WITH THE ACCESS OPENING OR THE CENTER OF GRAVITY OF THE UNIT AS NEEDED.
4. STORMTRAP ACCESS OPENINGS MAY BE RELOCATED TO AVOID INTERFERENCE WITH INLET AND/OR OUTLET PIPE OPENINGS SO PLACEMENT OF STEPS IS ATTAINABLE.
5. ACCESS OPENINGS SHOULD BE LOCATED IN ORDER MEET THE APPROPRIATE MUNICIPAL REQUIREMENTS. STORMTRAP RECOMMENDS AT LEAST ONE ACCESS OPENING PER SYSTEM FOR ACCESS AND INSPECTION.
6. USE PRECAST ADJUSTING RINGS AS NEEDED TO MEET GRADE. STORMTRAP RECOMMENDS FOR COVER OVER 2' TO USE PRECAST BARREL OR CONE SECTIONS. (BY OTHERS)

RECOMMENDED PIPE OPENING SPECIFICATION

1. MINIMUM EDGE DISTANCE FOR AN OPENING ON THE OUTSIDE WALL SHALL BE NO LESS THAN 1'-0".
2. MAXIMUM OPENING SIZE TO BE DETERMINED BY UNIT HEIGHT. PREFERRED OPENING SIZE ∅36" OR LESS. ANY OPENING NEEDED THAT DOES NOT FIT THIS CRITERIA SHALL BE BROUGHT TO THE ATTENTION OF STORMTRAP FOR REVIEW.
3. CONNECTING PIPES SHALL BE INSTALLED WITH A 1'-0" CONCRETE COLLAR, AND A AGGREGATE CRADLE FOR AT LEAST ONE PIPE LENGTH, AS SHOWN. A STRUCTURAL GRADE CONCRETE OR GROUT WITH A MINIMUM 28 DAY COMPRESSIVE STRENGTH OF 3000 PSI SHALL BE USED.
4. THE ANNULAR SPACE BETWEEN THE PIPE AND THE HOLE SHALL BE FILLED WITH NON-SHRINK GROUT.

RECOMMENDED PIPE INSTALLATION INSTRUCTIONS

1. CLEAN AND LIGHTLY LUBRICATE ALL OF PIPE TO BE INSERTED INTO STORMTRAP.
2. IF PIPE IS CUT, CARE SHOULD BE TAKEN TO ALLOW NO SHARP EDGES. BEVEL AND LUBRICATE LEAD END OF PIPE.
3. ALIGN CENTER OF PIPE TO CORRECT ELEVATION AND INSERT INTO OPENING.

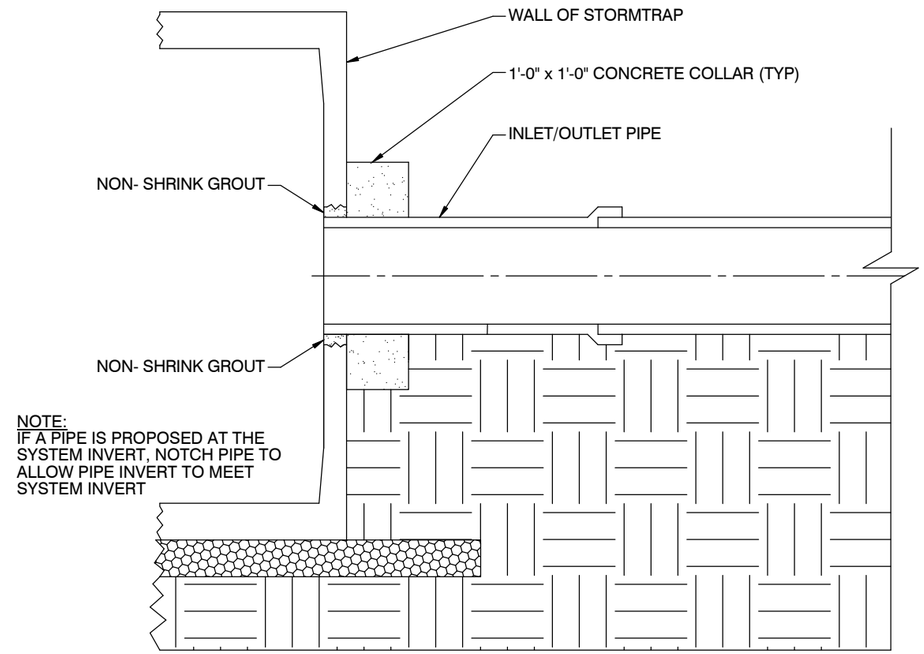

FOUNDATION PIPE CONNECTION

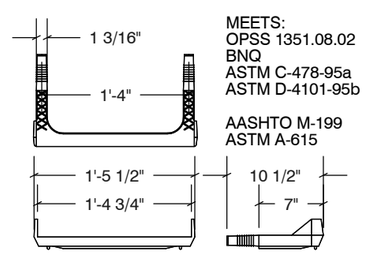

MEETS:
OPSS 1351.08.02
BNQ
ASTM C-478-95a
ASTM D-4101-95b

AASHTO M-199
ASTM A-615

STAIR DETAIL

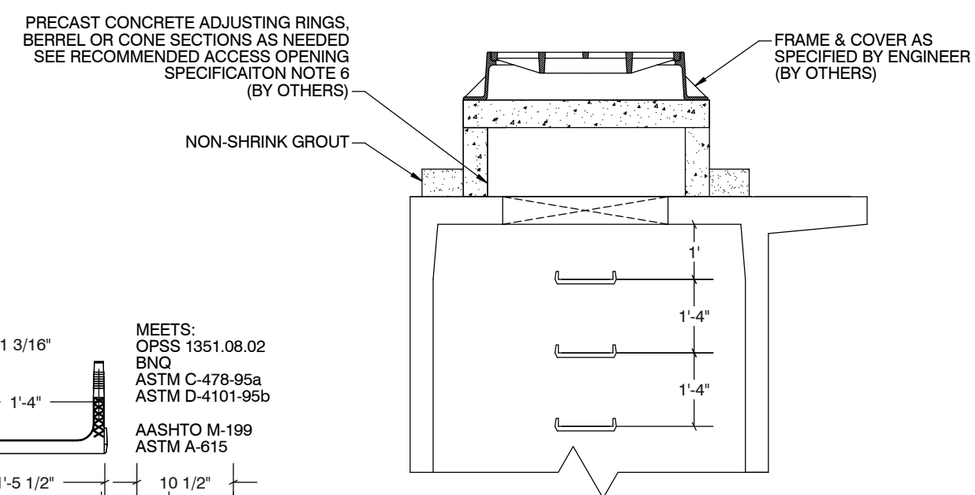

RISER / STAIR DETAIL

STORMTRAP
PRECAST CONCRETE MODULAR STORMWATER MANAGEMENT SYSTEMS
THIS STORMTRAP DESIGN MAY BE COVERED BY 1 OR MORE OF THE FOLLOWING U.S. PATENTS: NO. 6,991,402 B2, 7,160,058 B2, 7,344,335 B2 C.A. PATENT NO. 2,445,609
2495 WEST BUNGALOW ROAD
MORRIS, IL 60450
P: 815-941-4663
F: 815-416-1100

HUNSAKER & ASSOCIATES
3 HUGHES
IRVINE, CA 92618
Phone: 949-583-1010
Fax: 949-583-0759

TRACT 5241

LAGUNA, CA

DATE:
09-JAN-2015

APPROVED BY:

ISSUED FOR:
PRELMINARY

REV.:	DATE:	DESC.	DWG.
1	09-JAN-2015	ISSUED FOR PRELIMINARY	JPH

SCALE:
NTS

SHEET TITLE:
RECOMMENDED DOUBLELETRAP INSTALLATION SPECIFICATIONS

SHEET NUMBER:
2.0

BILL OF MATERIALS

QTY.	UNIT TYPE	DESCRIPTION	TOP WEIGHT	BASE WEIGHT
26	I	9'-0" DOUBLETRAP	15188	14986
4	II	9'-0" DOUBLETRAP	17263	17061
26	III	9'-0" DOUBLETRAP	14779	14678
6	IV	9'-0" DOUBLETRAP	15817	15716
0	VII	9'-0" DOUBLETRAP	14365	14365
2	SPIV	9'-0" DOUBLETRAP	VARIES	
12	PANEL	8" THICK WALL PANELS	6626#	
12	JOINTWRAP	150' PER ROLL		
84	JOINTTAPE	14.5' PER ROLL		

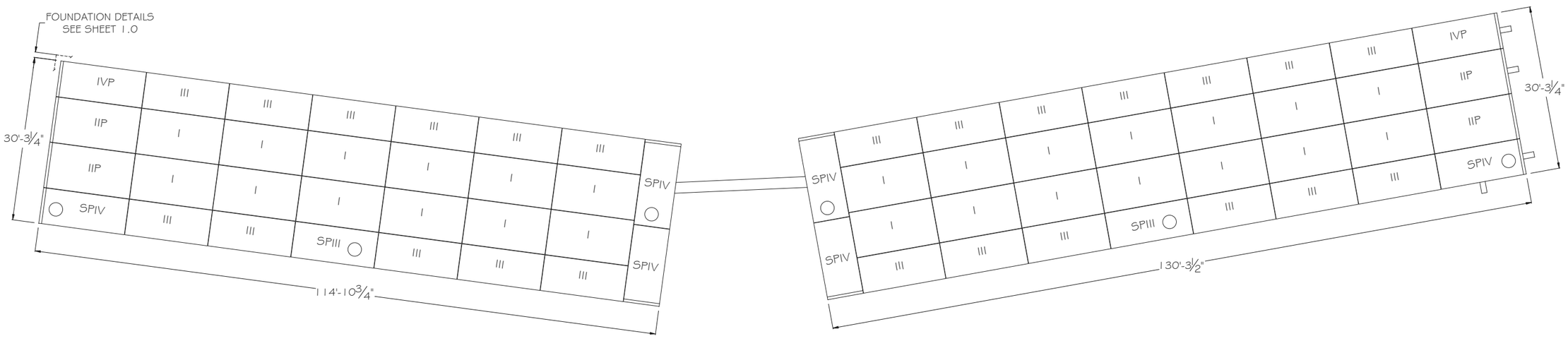

DESIGN CRITERIA

ALLOWABLE MAX GRADE = TBD
ALLOWABLE MIN GRADE = TBD
INSIDE HEIGHT ELEVATION = TBD
SYSTEM INVERT = TBD
STORMTRAP VOLUME = 60,115.73 C.F. / 1.38 A.F.

NOTES:

1. DIMENSION OF STORMTRAP SYSTEM ALLOW FOR A 3/4" GAP BETWEEN EACH UNIT.
2. ALL DIMENSIONS TO BE VERIFIED IN THE FIELD BY OTHERS.
3. SEE SHEET 2 FOR INSTALLATION SPECIFICATIONS.

LAYOUT DETAIL

STORMTRAP
PRECAST CONCRETE MODULAR STORMWATER MANAGEMENT SYSTEMS
THIS STORMTRTAP DESIGN MAY BE COVERED BY 1 OR MORE OF THE FOLLOWING U.S. PATENTS: NO. 6,991,402 B2; 7,160,058 B2; 7,344,335 B2 CA. PATENT NO. 2,445,609
2495 WEST BUNGALOW ROAD
MORRIS, IL 60450
P: 815-941-4663
F: 815-416-1100

HUNSAKER & ASSOCIATES
3 HUGHES
IRVINE, CA 92618
Phone: 949-583-1010
Fax: 949-583-0759

TRACT 5241

LAGUNA, CA

DATE: 09-JAN-2015

APPROVED BY:

ISSUED FOR: PRELMINARY

REV.:	DATE:	DESC.	DWG.
1	09-JAN-2015	ISSUED FOR PRELIMINARY	JPH

SCALE: NTS

SHEET TITLE: LAYOUT DETAIL

SHEET NUMBER: 3.0

TYPE I

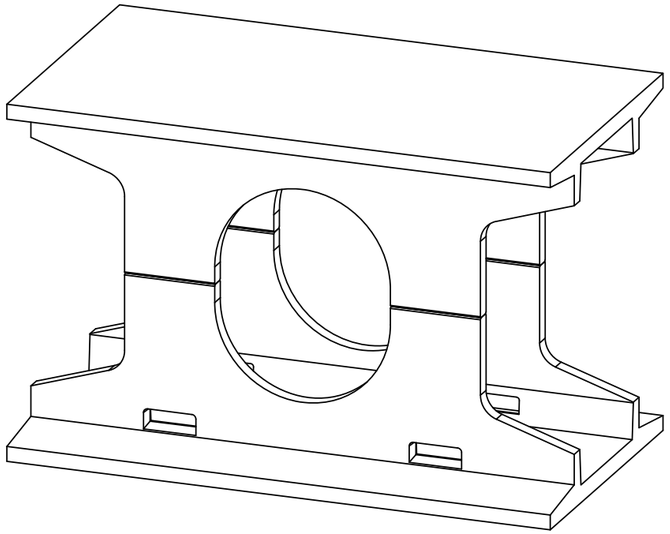

TYPE II

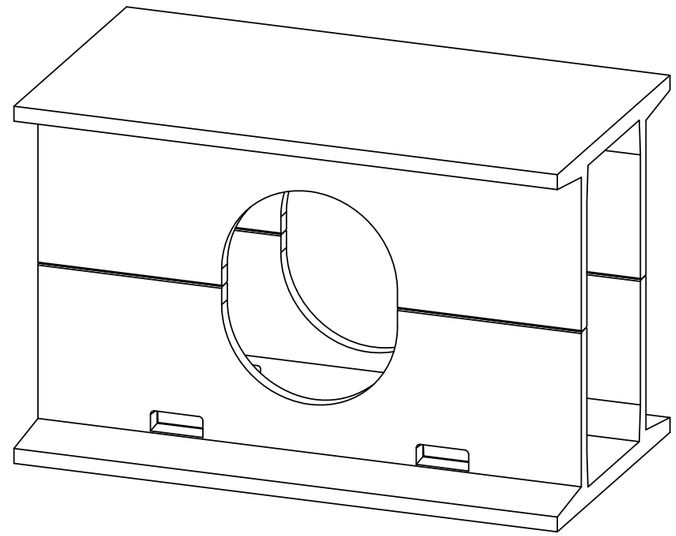

TYPE II
PANEL

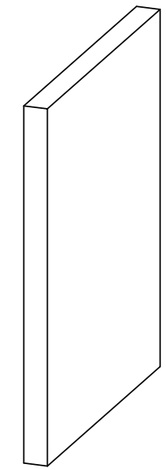

TYPE III

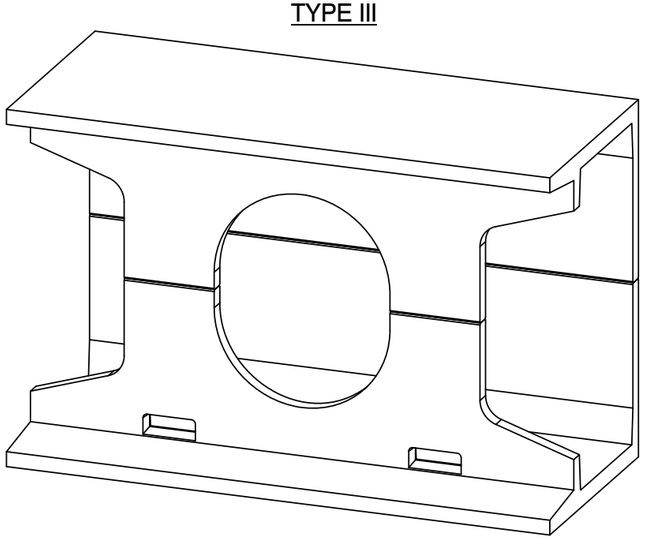

TYPE IV

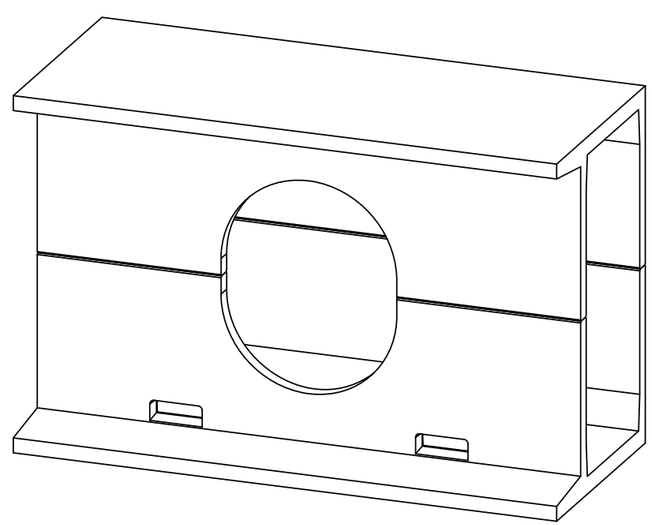

TYPE IV
PANEL

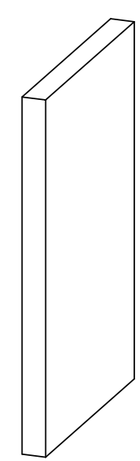

NOTES:

1. OPENING LOCATIONS VARY ON UNIT HEIGHT AND LENGTHS.
2. SP - INDICATES A UNIT WITH MODIFICATIONS.
3. P - INDICATES A UNIT WITH A PANEL ATTACHEMENT.
4. POCKET WINDOW OPENINGS ARE OPTIONAL.

STORMTRAP®
PRECAST CONCRETE MODULAR STORMWATER MANAGEMENT SYSTEMS
THIS STORMTRTAP DESIGN MAY BE COVERED BY 1 OR MORE OF THE FOLLOWING U.S. PATENTS: NO. 6,991,402 B2, 7,160,058 B2, 7,344,335 B2 CA. PATENT NO. 2,445,609
2495 WEST BUNGALOW ROAD
MORRIS, IL 60450
P: 815-941-4663
F: 815-416-1100

HUNSAKER &
ASSOCIATES

3 HUGHES
IRVINE, CA 92618
Phone: 949-583-1010
Fax: 949-583-0759

TRACT 5241

LAGUNA, CA

DATE:

09-JAN-2015

APPROVED BY:

ISSUED FOR:

PRELMINARY

REV.:	DATE:	DESC.	DWG.
1	09-JAN-2015	ISSUED FOR PRELIMINARY	JPH

SCALE:

NTS

SHEET TITLE:

9'-0" DOUBLETRAP
UNIT TYPES

SHEET NUMBER:

4.0

Attachment D

Conditions of Approval

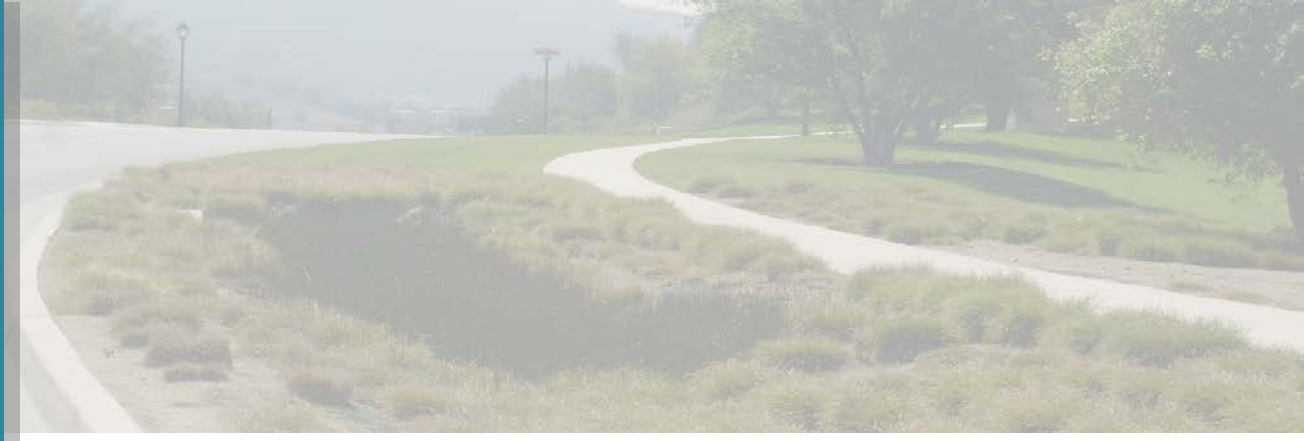

W.O #. 2950-5